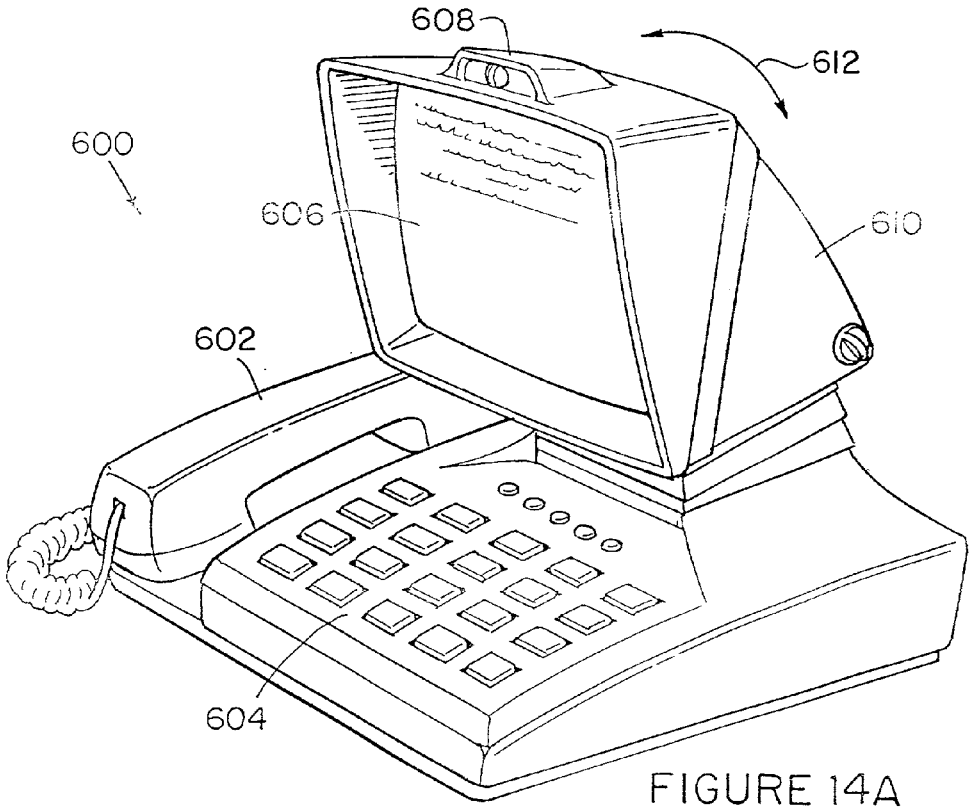

FIGURE 14A

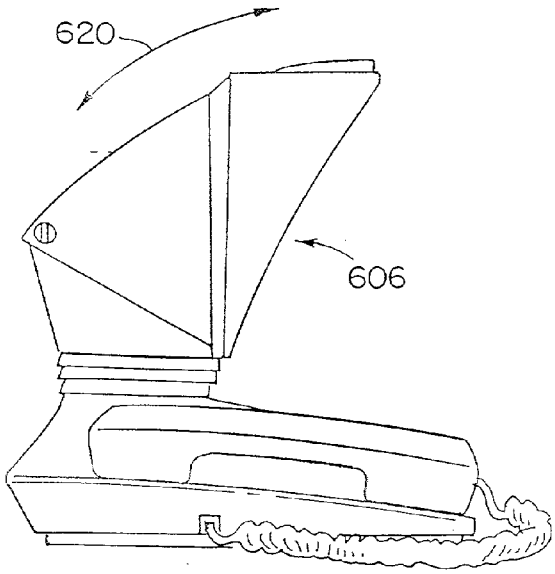

FIGURE 14B

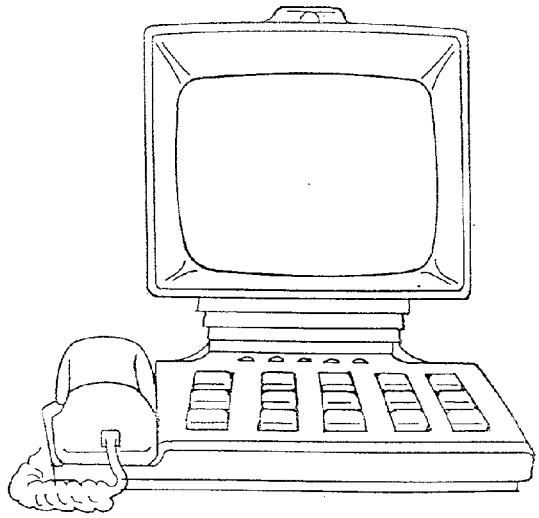

FIGURE 14C