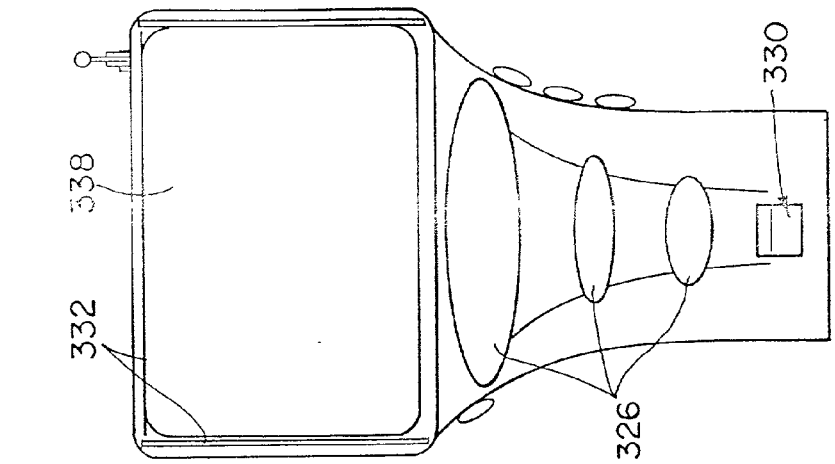

FIGURE 15C

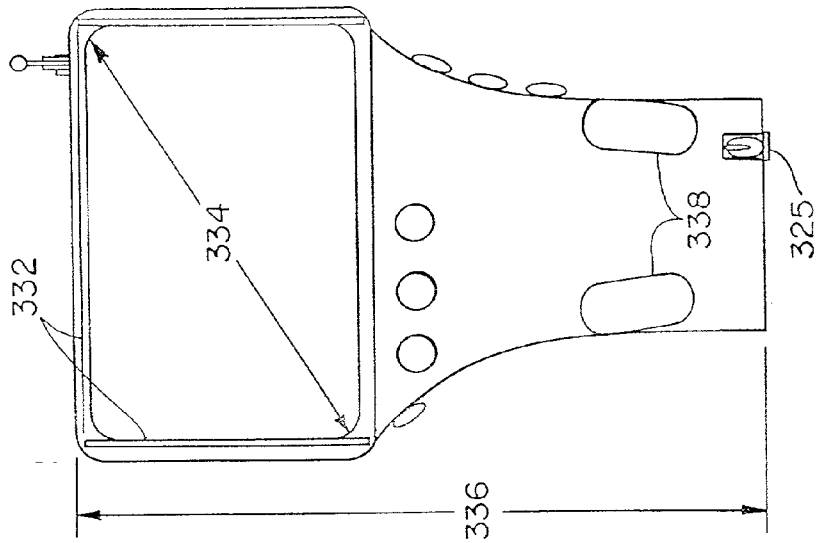

FIGURE 15B

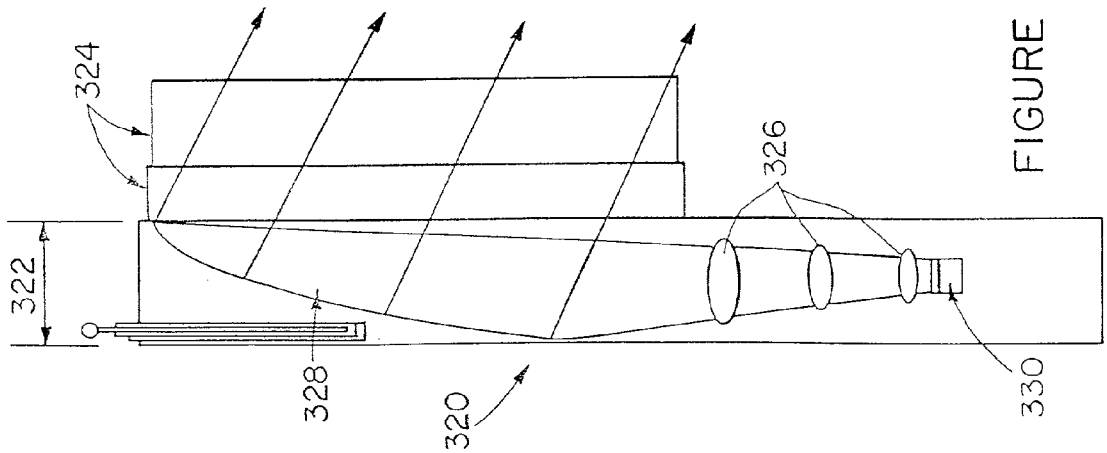

FIGURE 15A