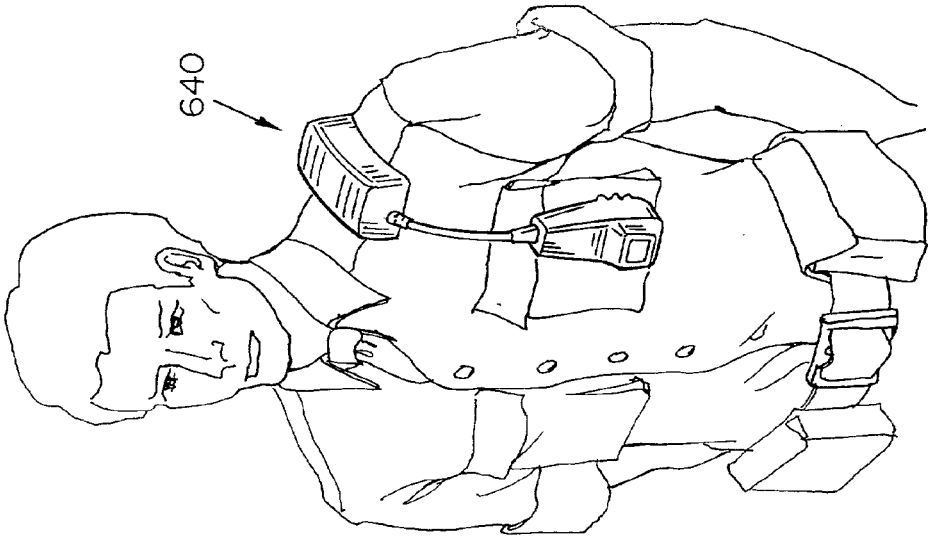

FIGURE 16B

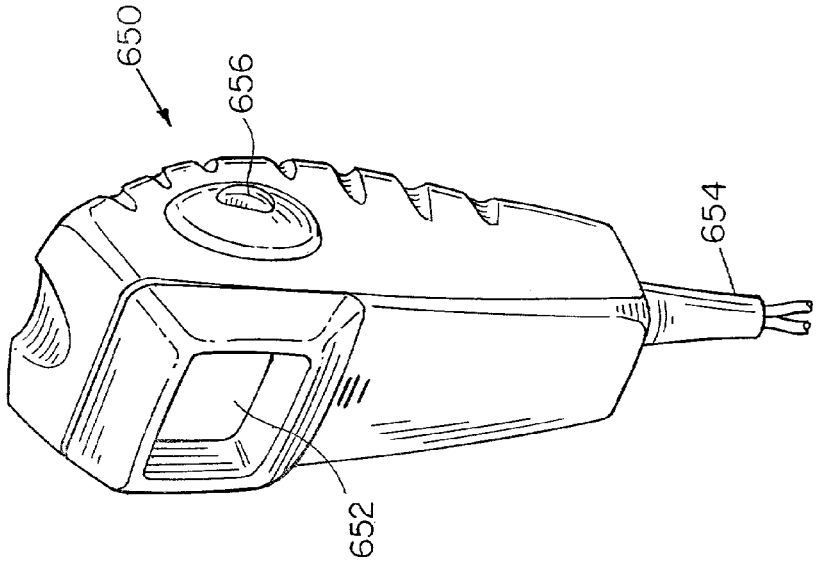

FIGURE 16A