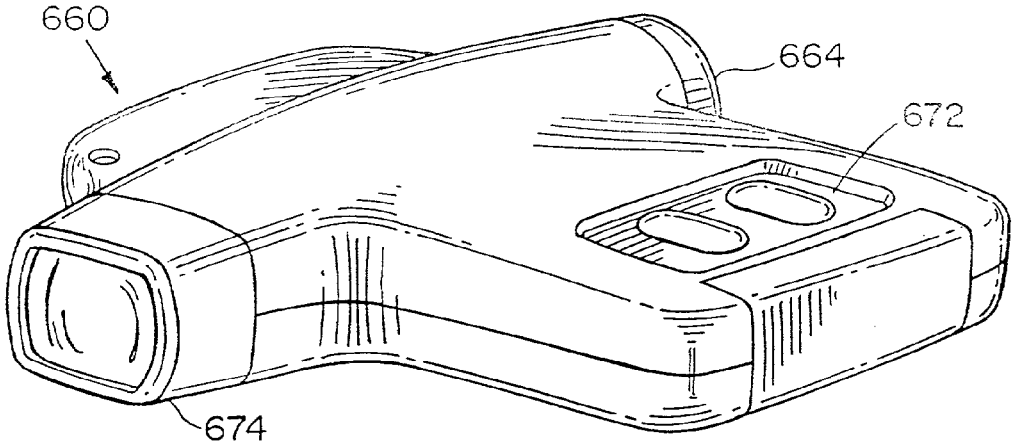

FIGURE 16C

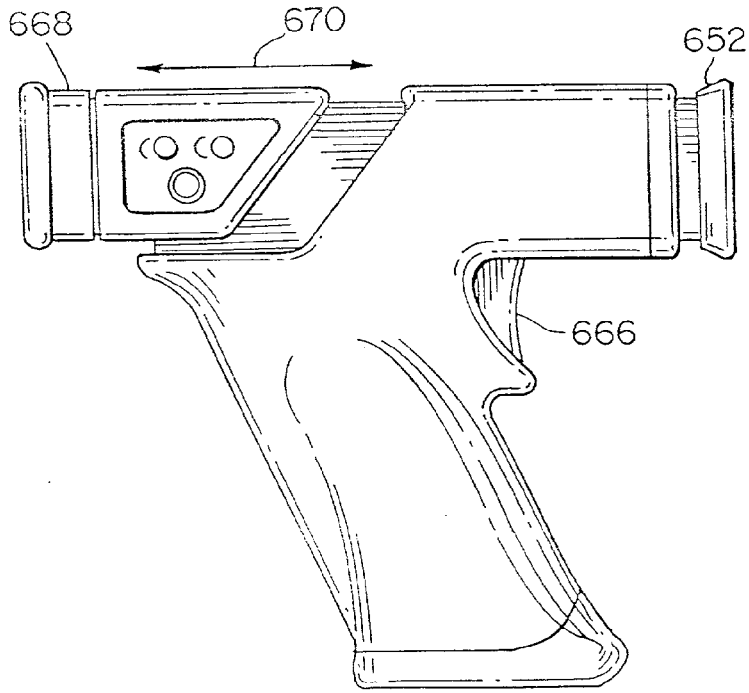

FIGURE 16D