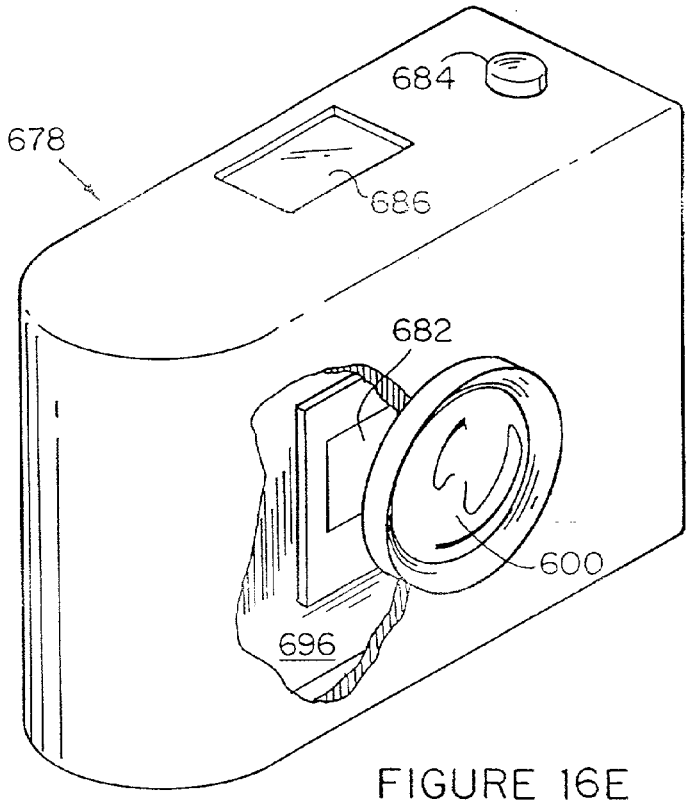

FIGURE 16E

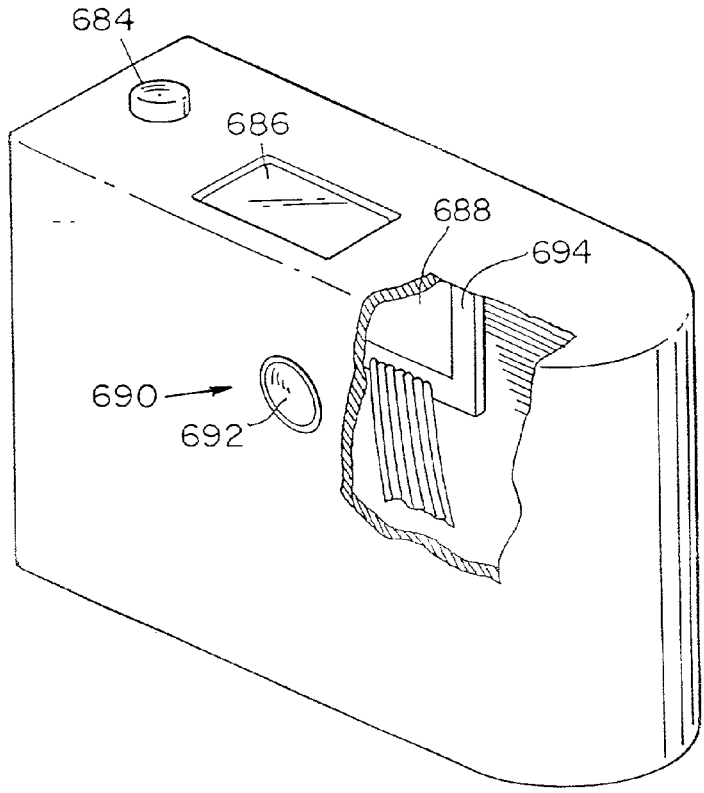

FIGURE 16F