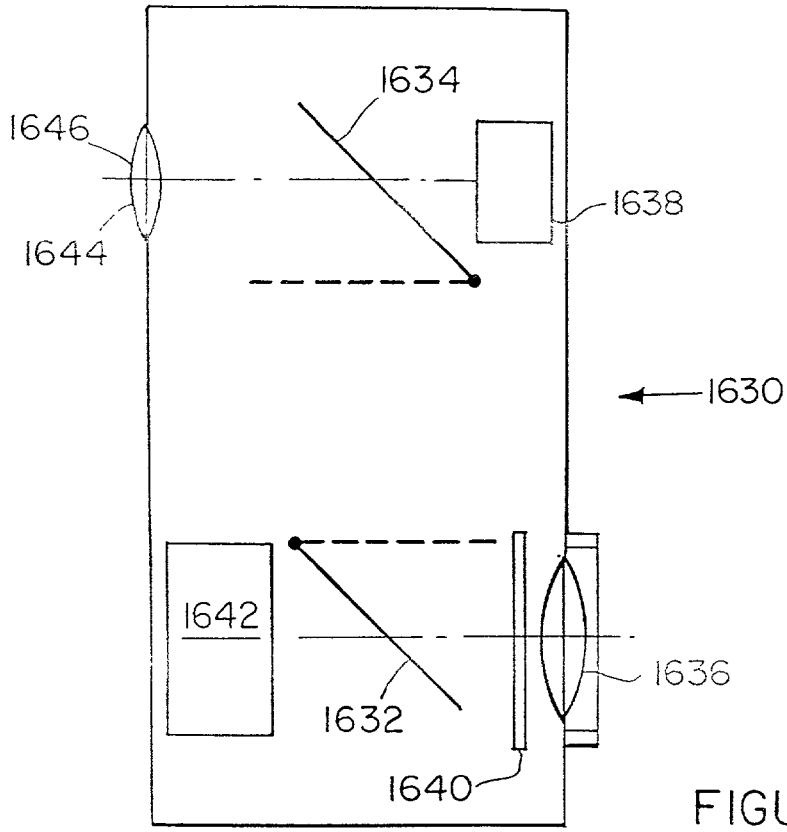

FIGURE 16H

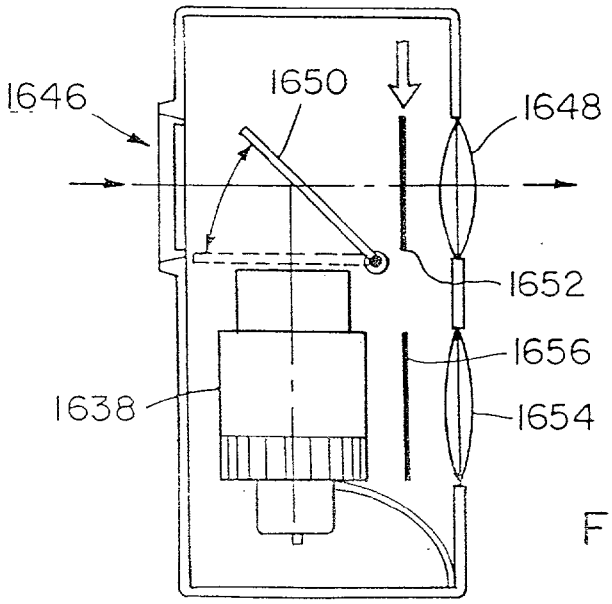

FIGURE 16I