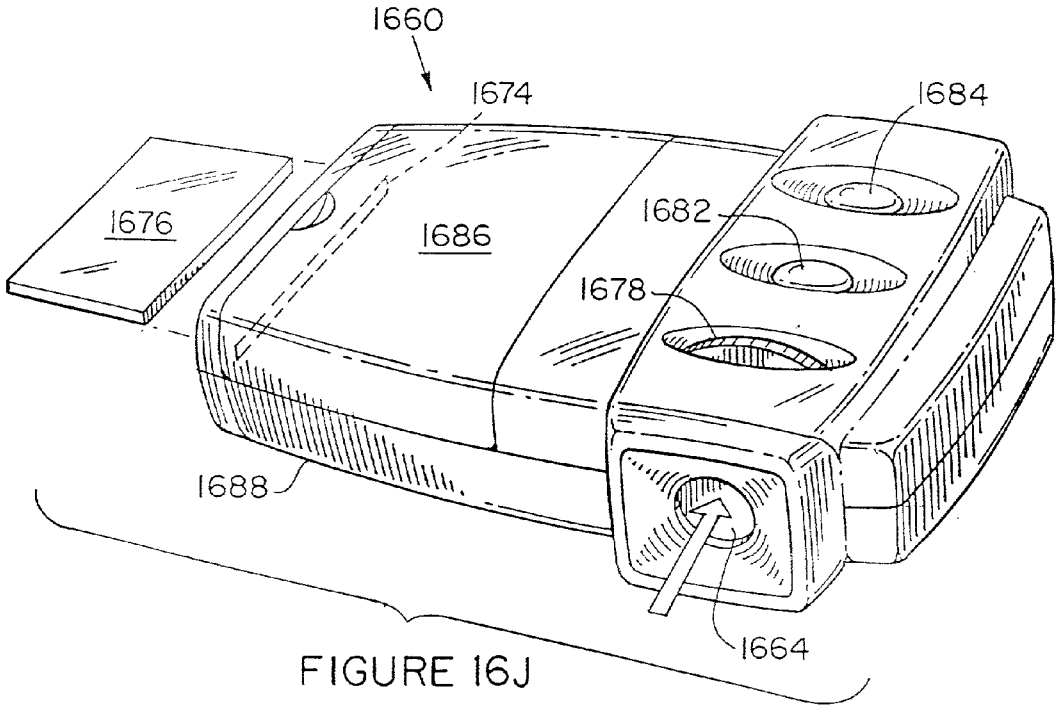

FIGURE 16J

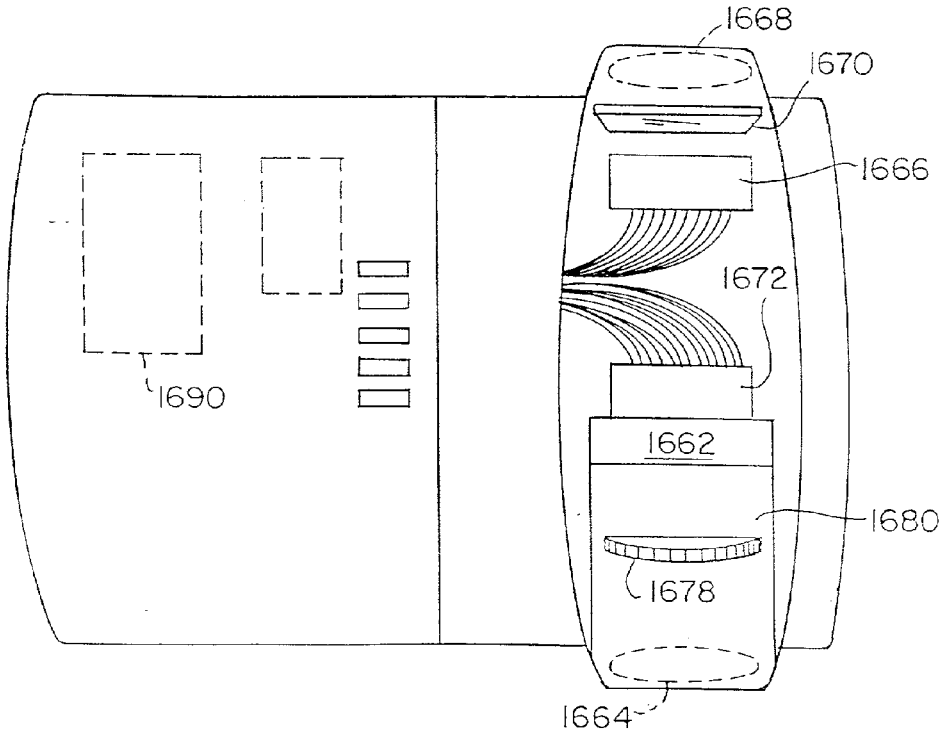

FIGURE 16K