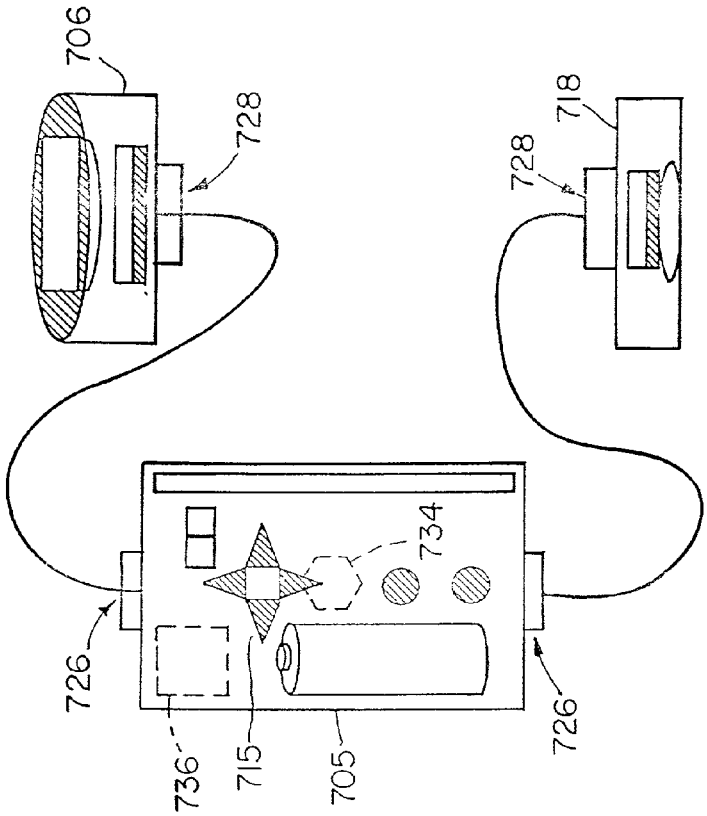

FIGURE 17B

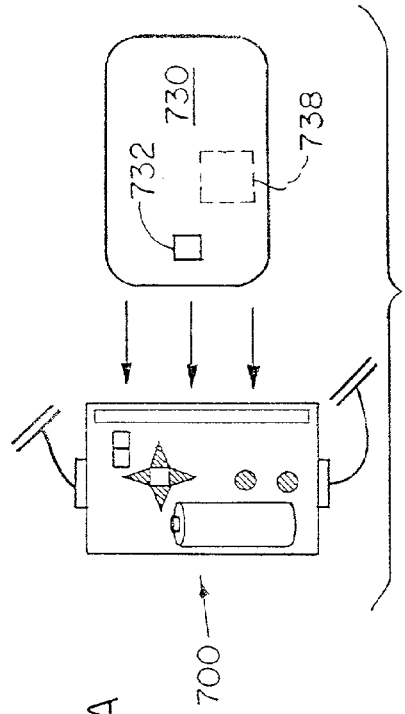

FIGURE 17C

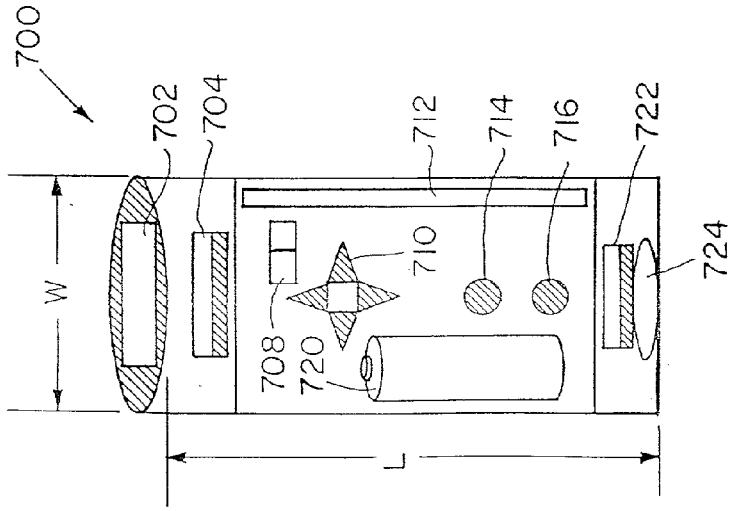

FIGURE 17A