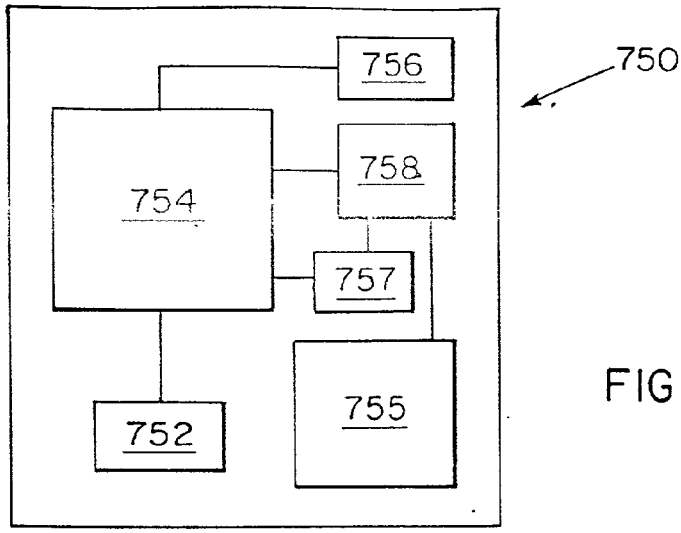


FIGURE 18

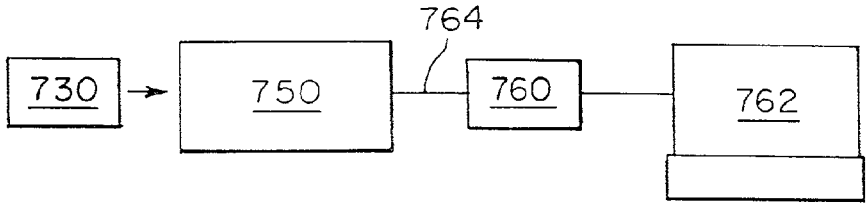


FIGURE 19A

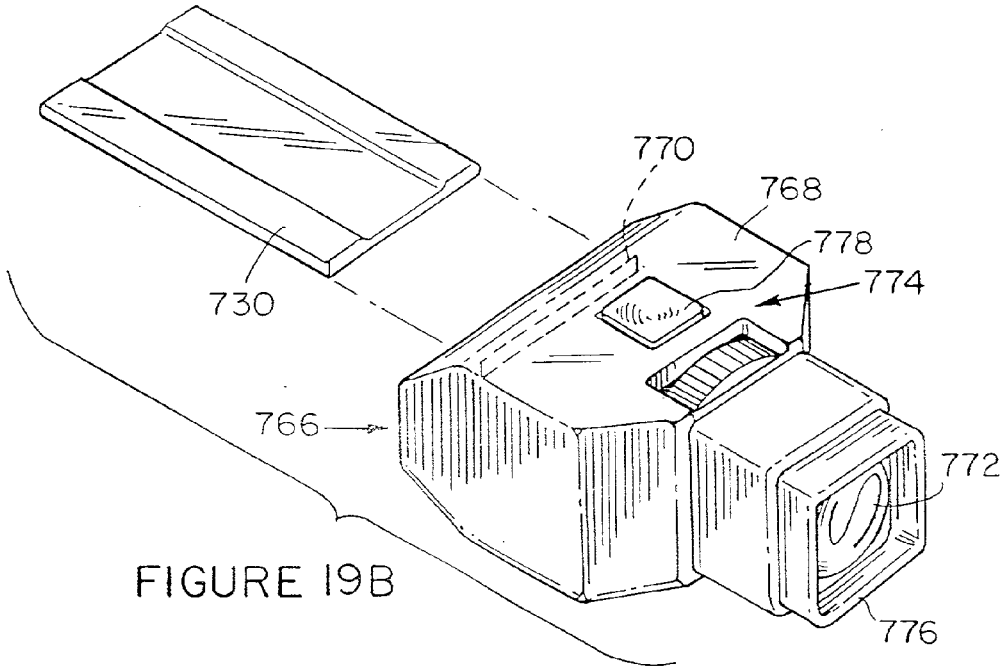


FIGURE 19B