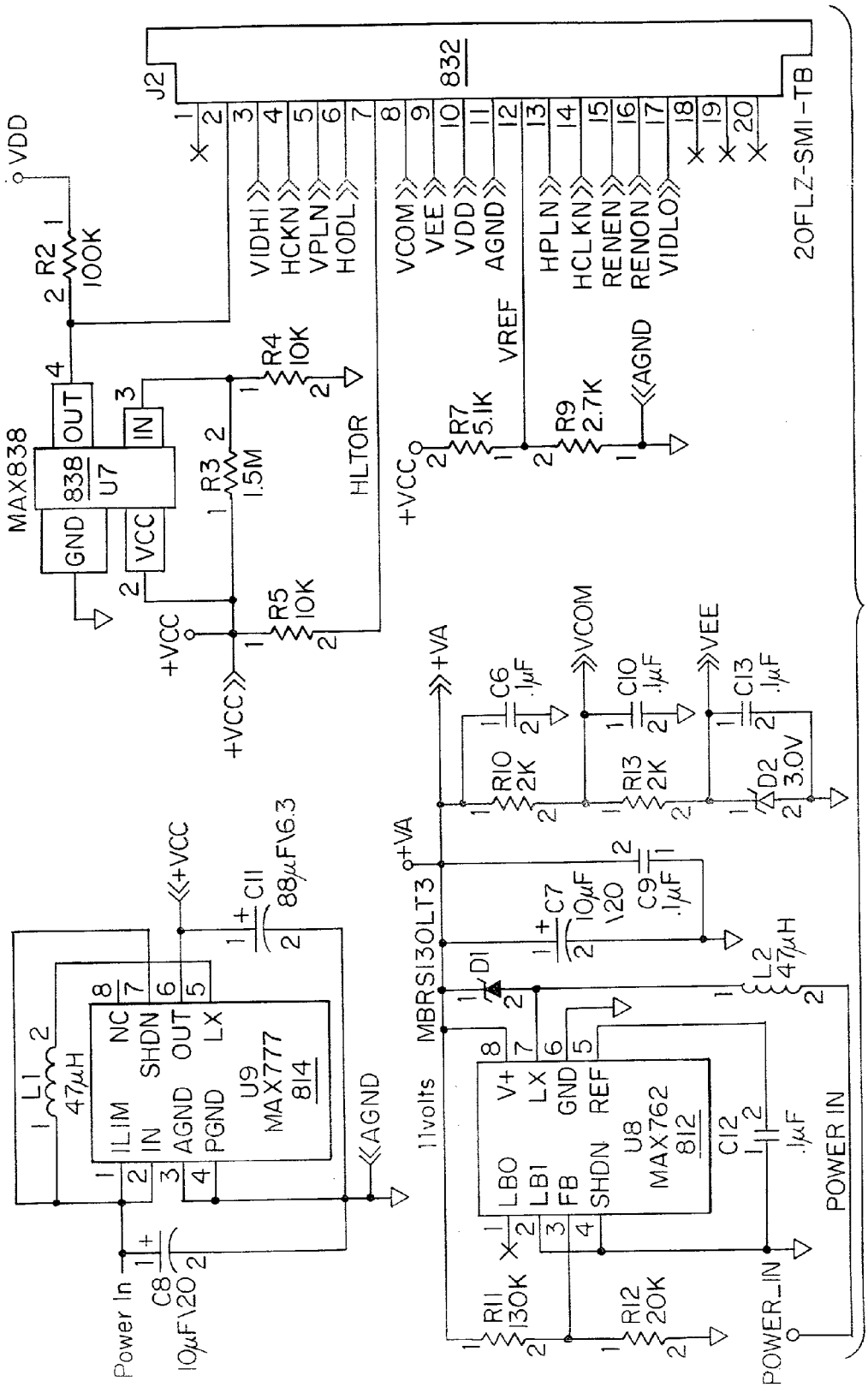
J2
832
20FLZ-SMI-TB
VDD
R2 100K
MAX838
OUT
IN
GND
VCC
838
U7
R3 1.5M
R4 10K
R5 10K
HLTOR
+VCC
VIDHI
HCKN
VPLN
HODL
VCOM
VEE
VDD
AGND
VREF
HPLN
HCLKN
RENEN
RENON
VIDLO
R7 5.1K
R9 2.7K
AGND
+VA
C6 .1μF
VCOM
C10 .1μF
VEE
C13 .1μF
R10 2K
R13 2K
D2 3.0V
C11 88μF\6.3
L1 47μH
NC
SHDN
OUT
LX
ILIM
IN
AGND
PGND
U9
MAX777
814
Power In
C8 10μF\20
MBRS130LT3
D1
C7 10μF \20
C9 .1μF
L2 47μH
11volts
V+
LX
GND
REF
LBO
LB1
FB
SHDN
U8
MAX762
812
C12 .1μF
POWER IN
R11 130K
R12 20K
POWER_IN

FIGURE 19D