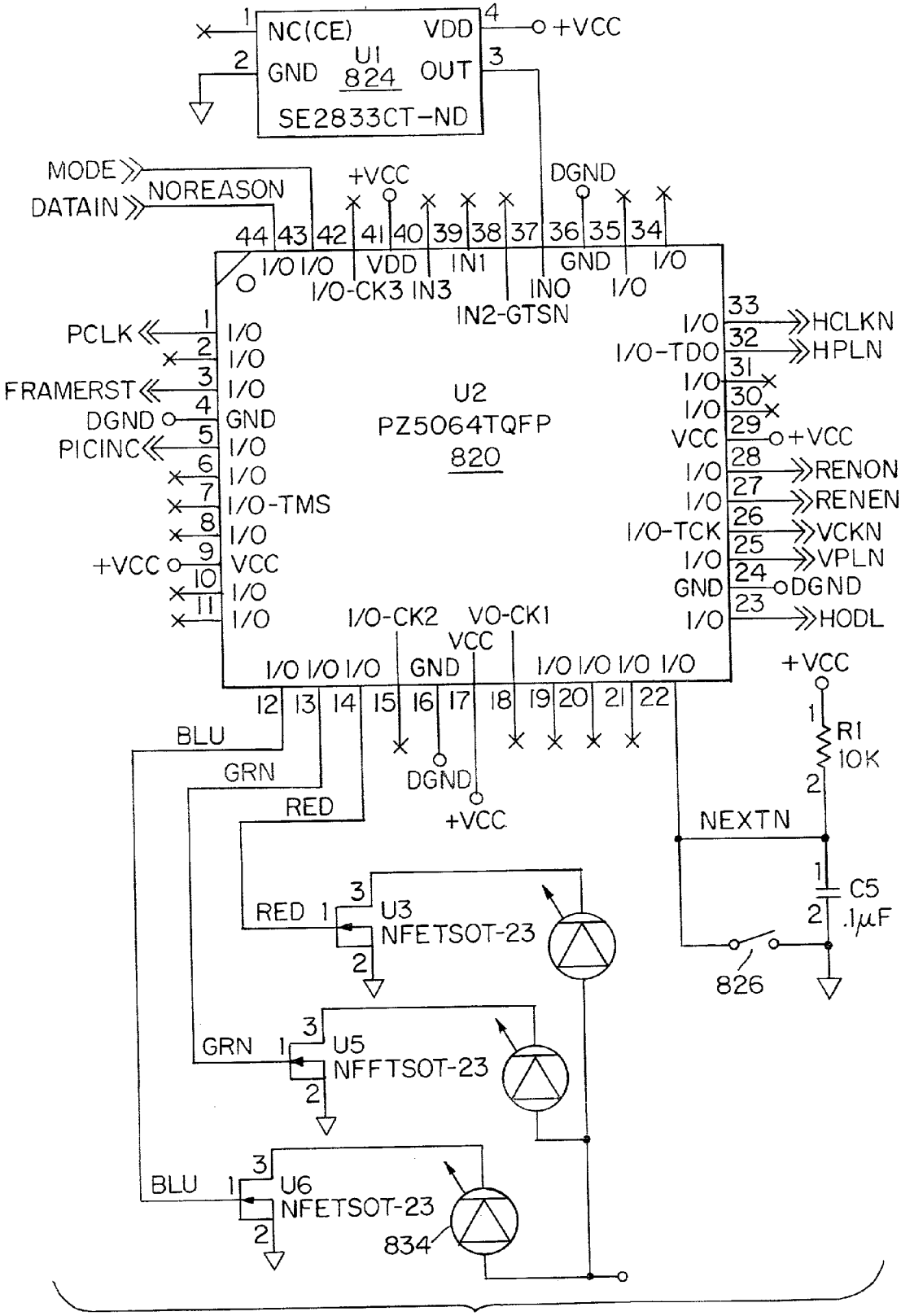
NC(CE)
VDD
+VCC
U1
824
GND
OUT
SE2833CT-ND
MODE
NOREASON
DATAIN
+VCC
DGND
I/O I/O VDD IN1 GND I/O
I/O-CK3 IN3 IN0 I/O
IN2-GTSN
PCLK
FRAMERST
DGND
PICINC
I/O
GND
I/O-TMS
VCC
U2
PZ5064TQFP
820
I/O-TDO
HCLKN
HPLN
RENON
RENEN
I/O-TCK
VCKN
VPLN
DGND
HODL
I/O-CK2 VO-CK1
VCC
GND
BLU
GRN
RED
DGND
+VCC
R1
10K
NEXTN
C5
.1μF
826
U3
NFETSOT-23
U5
NFFTSOT-23
U6
NFETSOT-23
834

FIGURE 19Ea