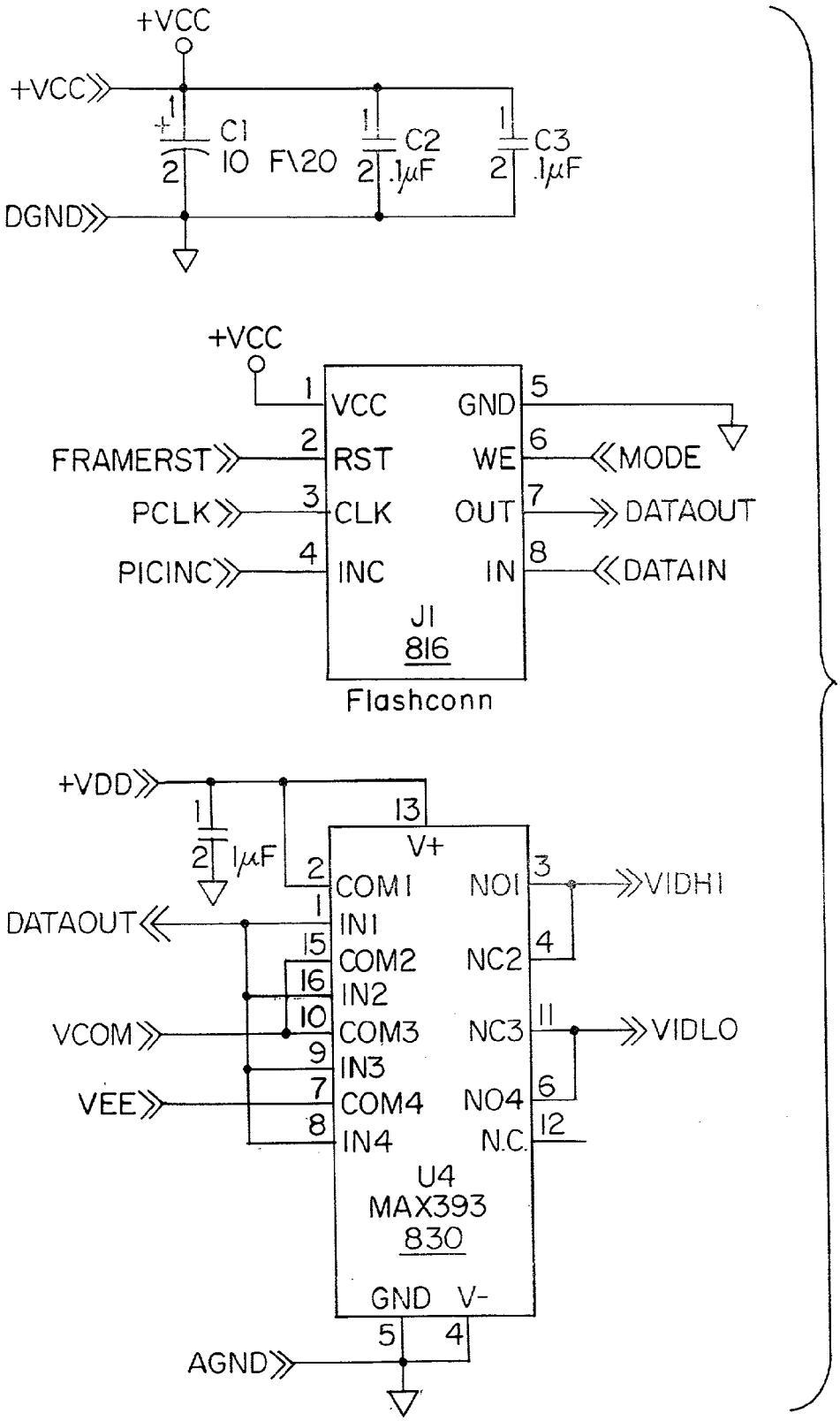
+VCC
+VCC
C1
10 F\20
C2
.1μF
C3
.1μF
DGND
+VCC
VCC
GND
FRAMERST
RST
WE
MODE
PCLK
CLK
OUT
DATAOUT
PICINC
INC
IN
DATAIN
J1
816
Flashconn
+VDD
1μF
V+
COM1
NO1
VIDHI
DATAOUT
IN1
COM2
NC2
IN2
VCOM
COM3
NC3
VIDLO
IN3
VEE
COM4
NO4
IN4
N.C.
U4
MAX393
830
GND
V-
AGND

FIGURE 19Eb