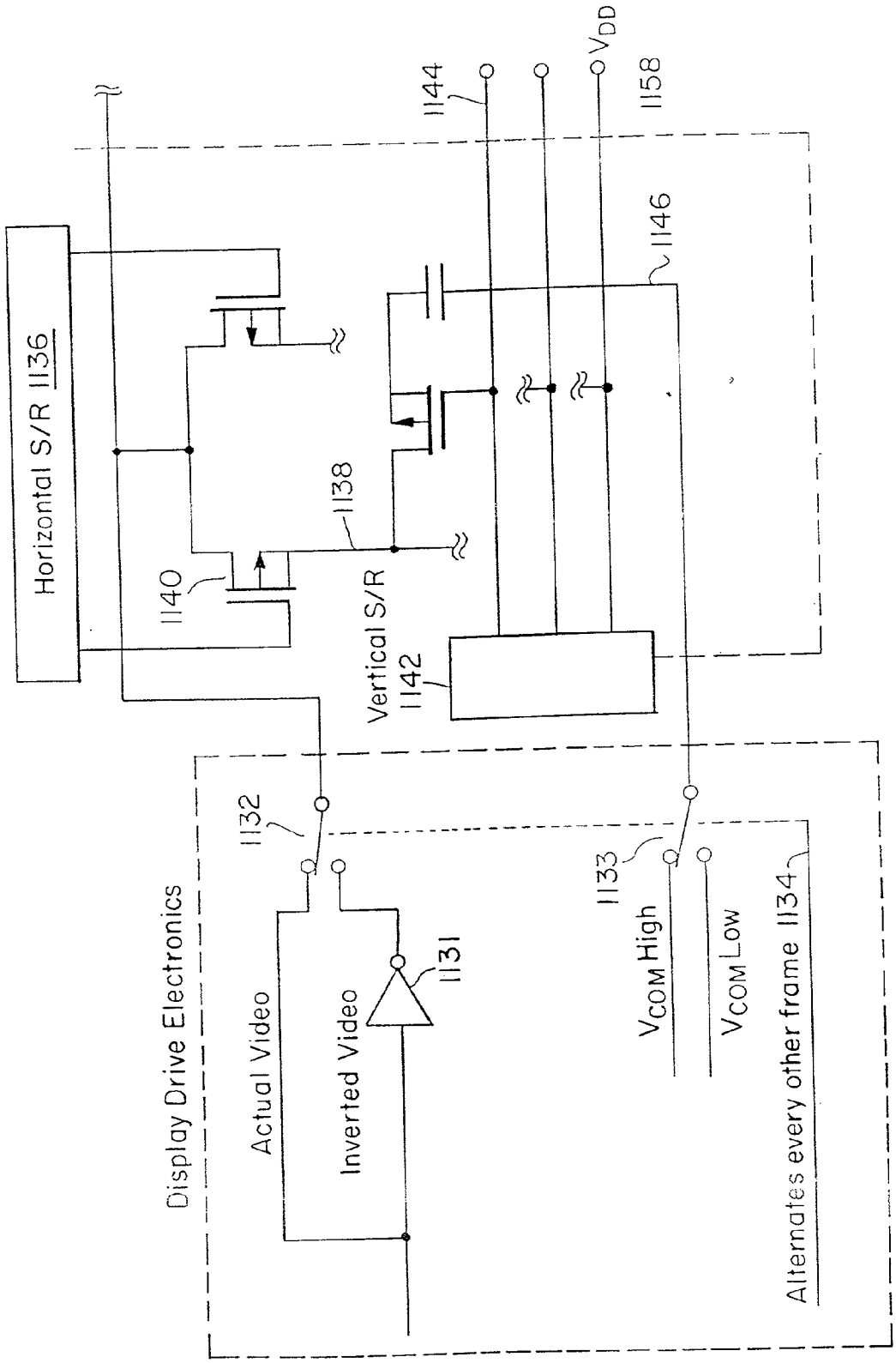
Horizontal S/R 1136
1140
1138
Vertical S/R
1142
1144
V_{DD}
1158
1146
Display Drive Electronics
1132
Actual Video
Inverted Video
1131
1133
V_{COM} High
V_{COM} Low
Alternates every other frame 1134

FIGURE 2H