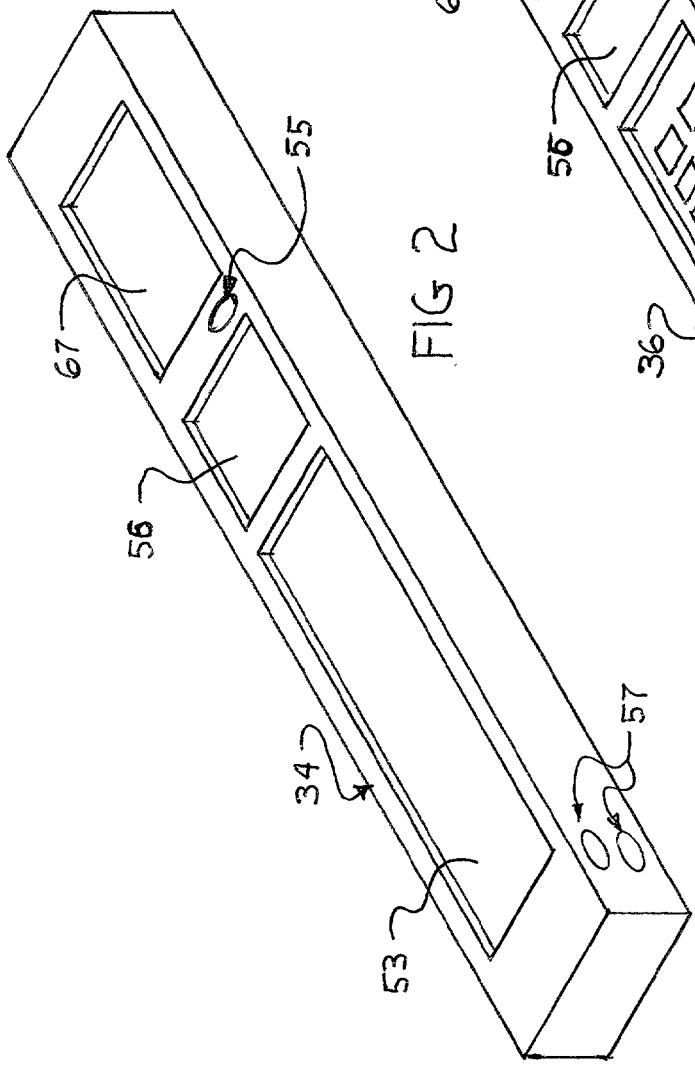

FIG 2

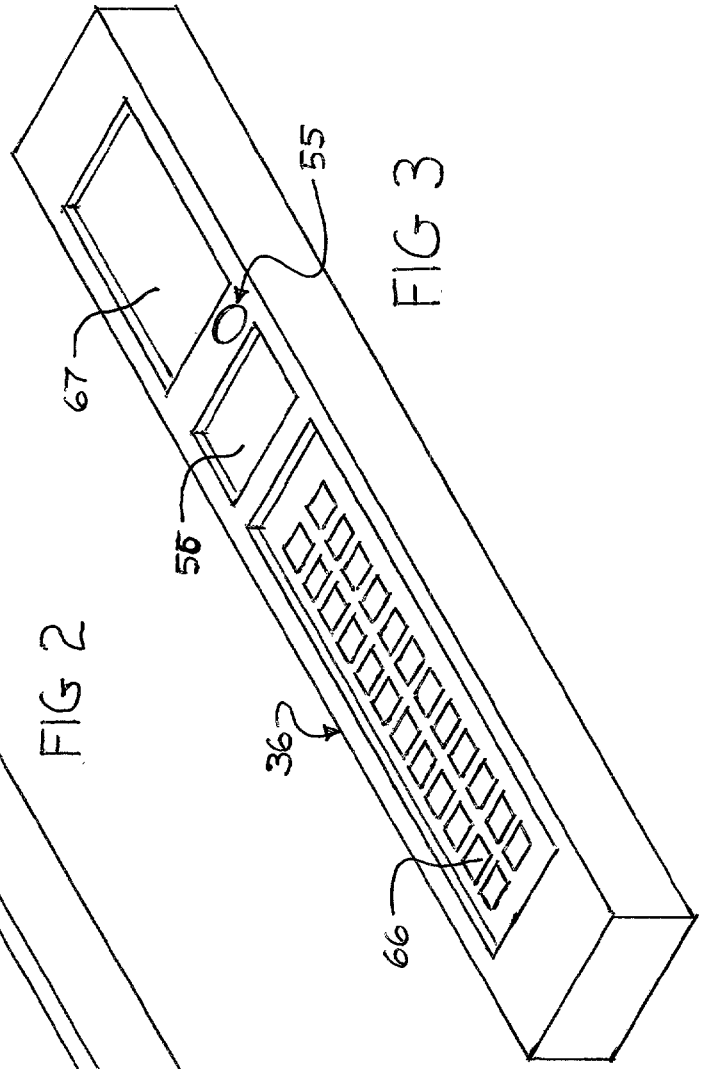

FIG 3