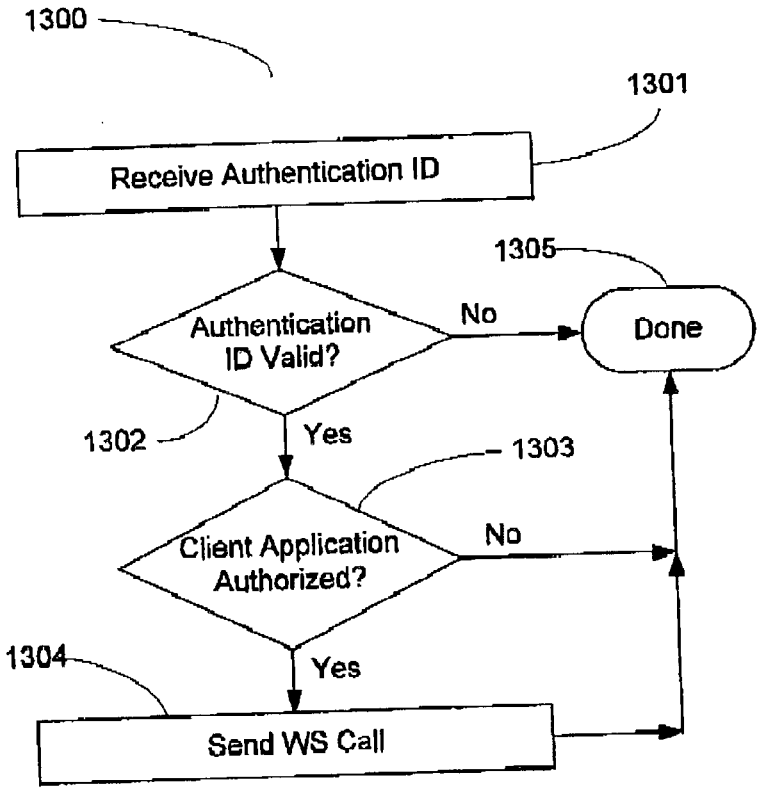

Figure 13

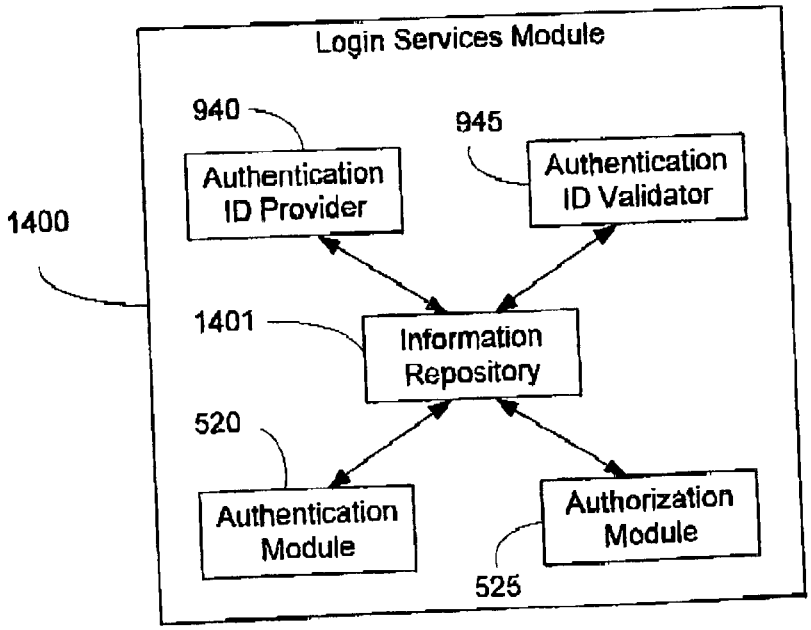

Figure 14