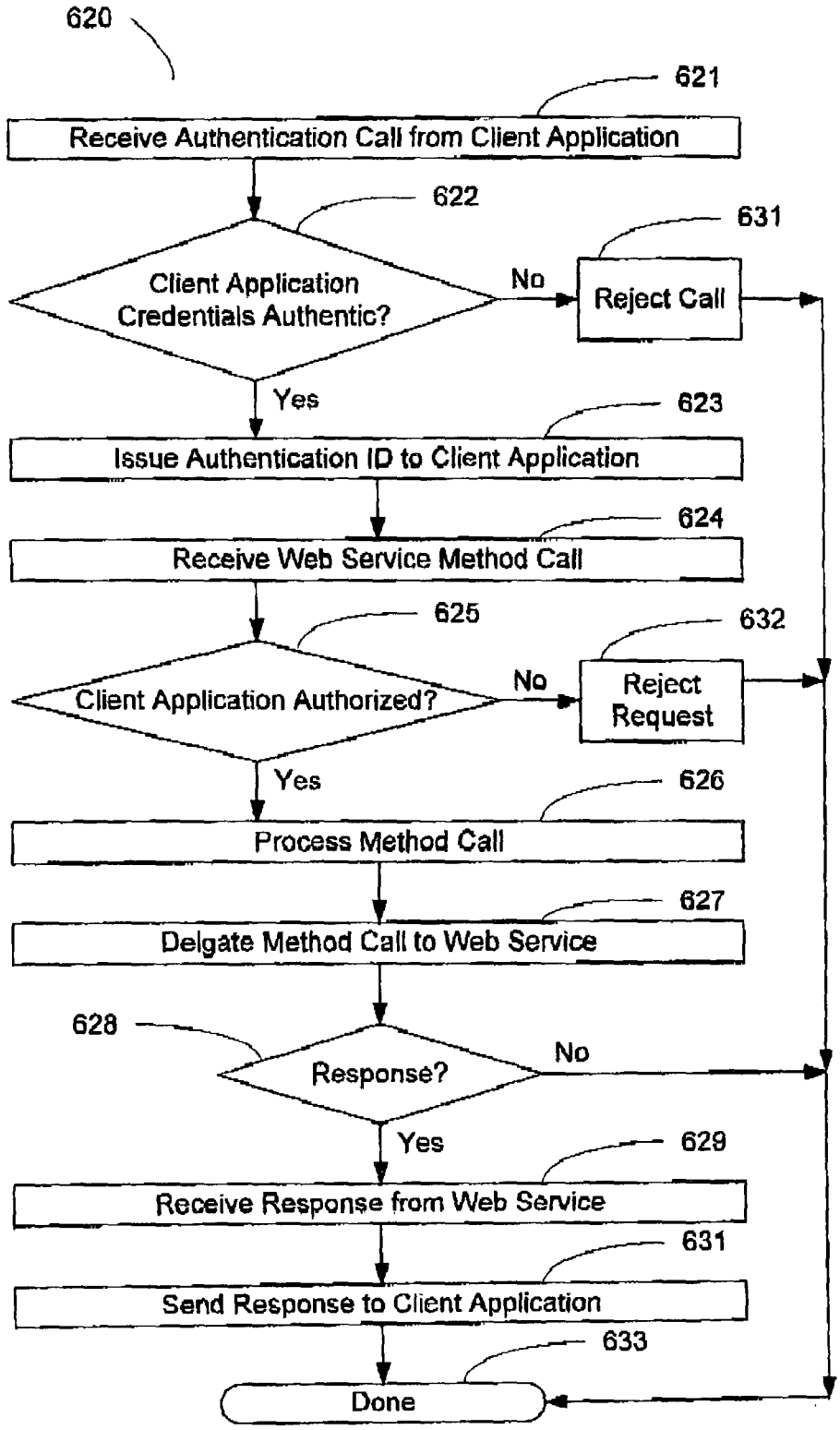
620
621
Receive Authentication Call from Client Application
622
Client Application Credentials Authentic?
No
631
Reject Call
Yes
623
Issue Authentication ID to Client Application
624
Receive Web Service Method Call
625
Client Application Authorized?
No
632
Reject Request
Yes
626
Process Method Call
627
Delgate Method Call to Web Service
628
Response?
No
Yes
629
Receive Response from Web Service
631
Send Response to Client Application
633
Done

Figure 6B