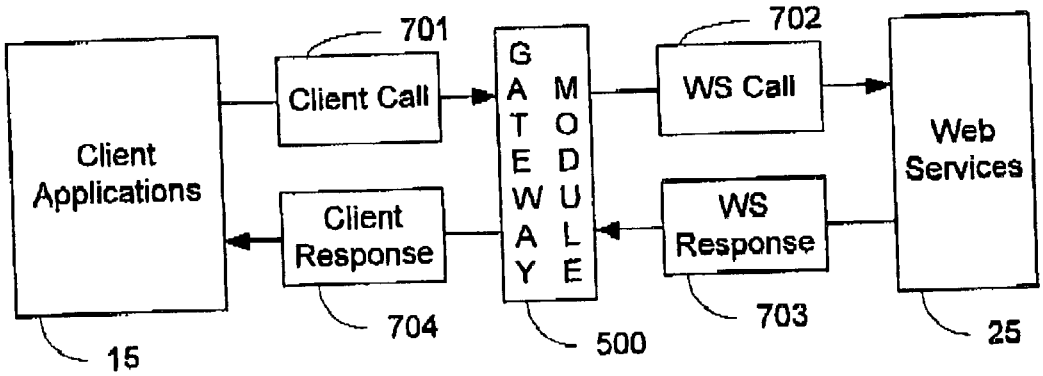

Figure 7A

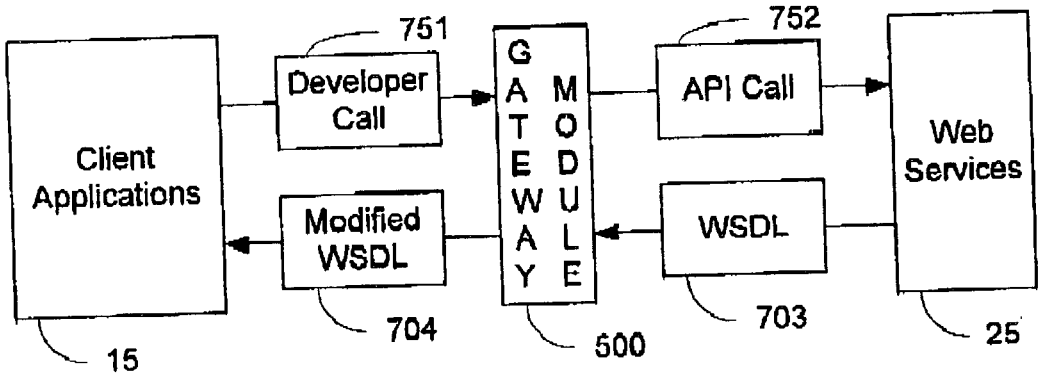

Figure 7B

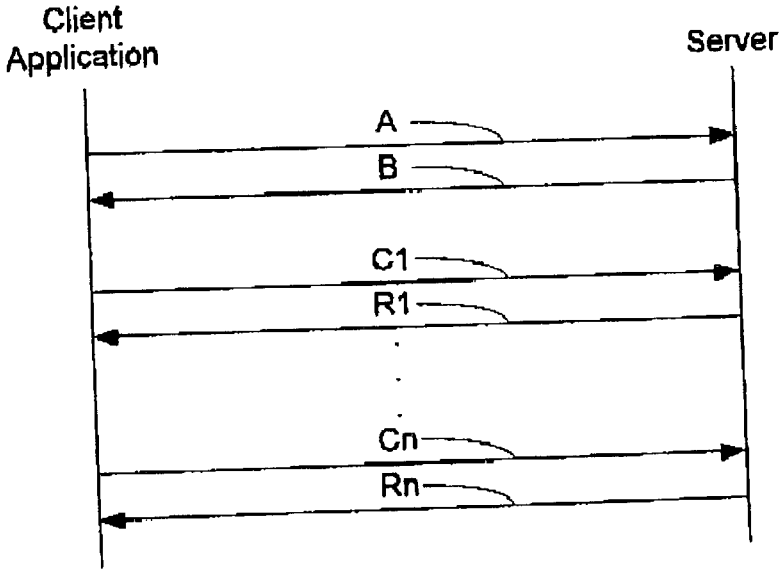

Figure 11