Fig. 8

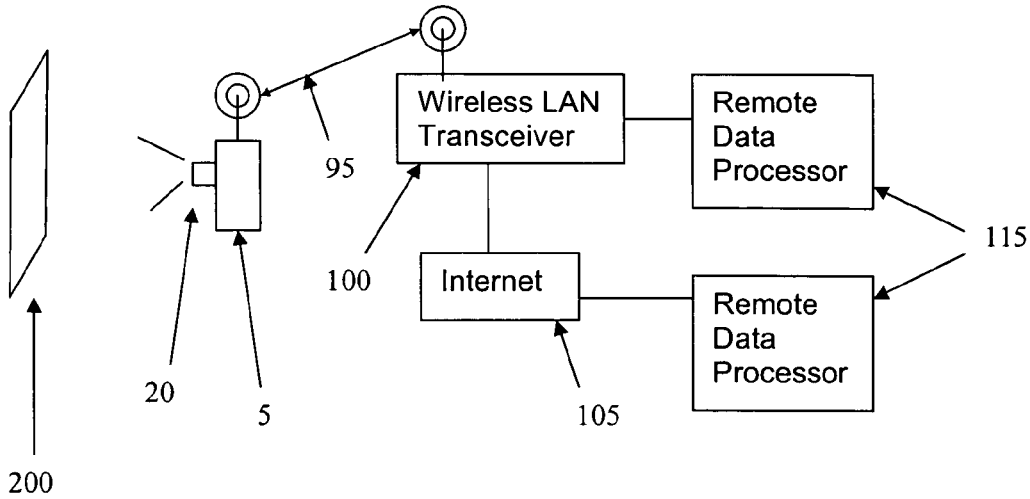
Wireless LAN Transceiver
Remote Data Processor
Internet
Remote Data Processor
95
100
115
20
5
105
200