US 20050212304A1

(19) United States

(12) Patent Application Publication

(10) Pub. No.: US 2005/0212304 A1

(43) Pub. Date: Sep. 29, 2005

Herrera et al.

(54) ACTIVE SEAL ASSISTED LATCHING ASSEMBLIES

(76) Inventors: **Guillermo A. Herrera**, Winnetka, CA (US); **Andrew C. Keefe**, Santa Monica, CA (US); **Christopher P. Henry**, Newbury Park, CA (US); **Geoffrey P. Mc Knight**, Los Angeles, CA (US); **Alan L. Browne**, Grosse Pointe, MI (US); **Nancy L. Johnson**, Northville, MI (US)

Correspondence Address:
KATHRYN A MARRA
General Motors Corporation
Legal Staff, Mail Code 482-C23-B21
P.O. Box 300
Detroit, MI 48265-3000 (US)

(21) Appl. No.: **11/074,578**

(22) Filed: **Mar. 8, 2005**

Related U.S. Application Data

(60) Provisional application No. 60/552,781, filed on Mar. 12, 2004.

Publication Classification

(51) **Int. Cl.**[7] **E05C 3/06**

(52) **U.S. Cl.** **292/251.5**

(57) **ABSTRACT**
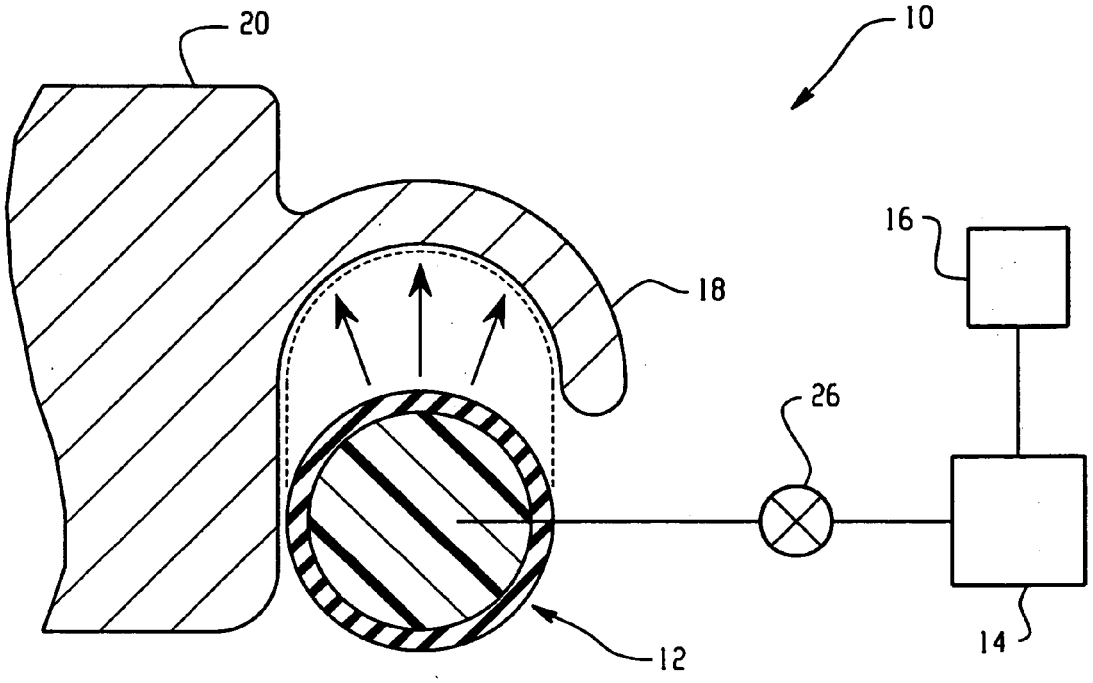
Active seal assisted latching assemblies employing active materials that can be controlled and remotely changed to effect the latching. In this manner, in seal applications such as a vehicle door application, door opening and closing efforts can be minimized yet seal effectiveness can be maximized.