US 20060071904A1

(19) United States

(12) Patent Application Publication

(10) Pub. No.: US 2006/0071904 A1

(43) Pub. Date: Apr. 6, 2006

Cho et al.

(54) METHOD OF AND APPARATUS FOR EXECUTING FUNCTION USING COMBINATION OF USER'S KEY INPUT AND MOTION

(75) Inventors: **Sung-jung Cho**, Suwon-si (KR); **Soon-joo Kwon**, Seongnam-si (KR); **Wook Chang**, Seoul (KR); **Dong-yoon Kim**, Seoul (KR); **Jong-koo Oh**, Yongin-si (KR); **Eun-seok Choi**, Anyang-si (KR); **Won-chul Bang**, Seongnam-si (KR); **Joon-kee Cho**, Yongin-si (KR)

Correspondence Address:
STAAS & HALSEY LLP
SUITE 700
1201 NEW YORK AVENUE, N.W.
WASHINGTON, DC 20005 (US)

(73) Assignee: **Samsung Electronics Co., Ltd.**, Suwon-si (KR)

(21) Appl. No.: **11/195,603**

(22) Filed: **Aug. 3, 2005**

(30) **Foreign Application Priority Data**

Oct. 5, 2004 (KR) 10-2004-0079202
Dec. 29, 2004 (KR) 10-2004-0115071

Publication Classification

(51) **Int. Cl.**
G09G 5/00 (2006.01)

(52) **U.S. Cl.** **345/156**

(57) **ABSTRACT**
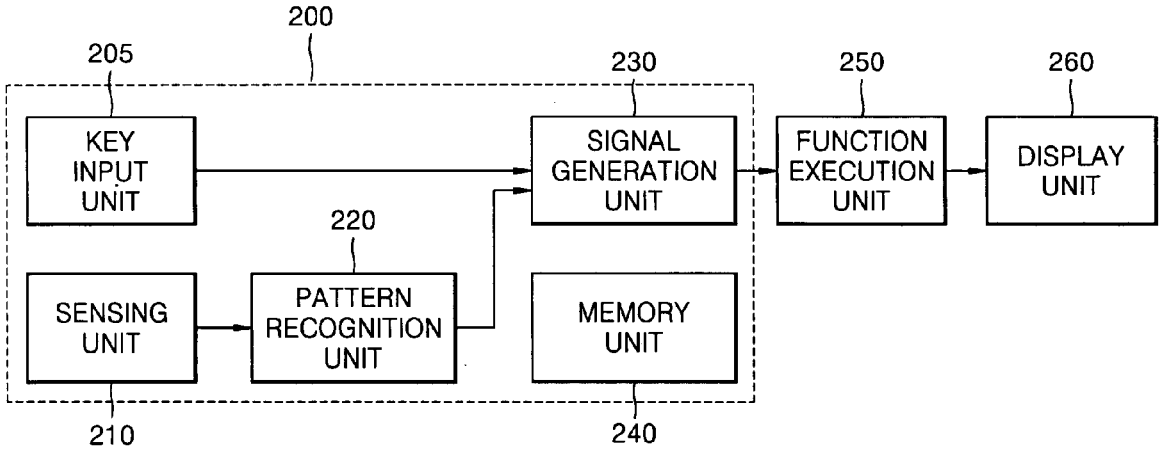
A method and apparatus for executing a function using a combination of a user's key input and motion in a terminal such as a mobile phone. The method includes receiving a key input from a user, sensing a motion of the user using a sensor, recognizing a pattern of the sensed motion, and executing a function corresponding to a combination of the key input and the recognized motion pattern.