FIG. 2

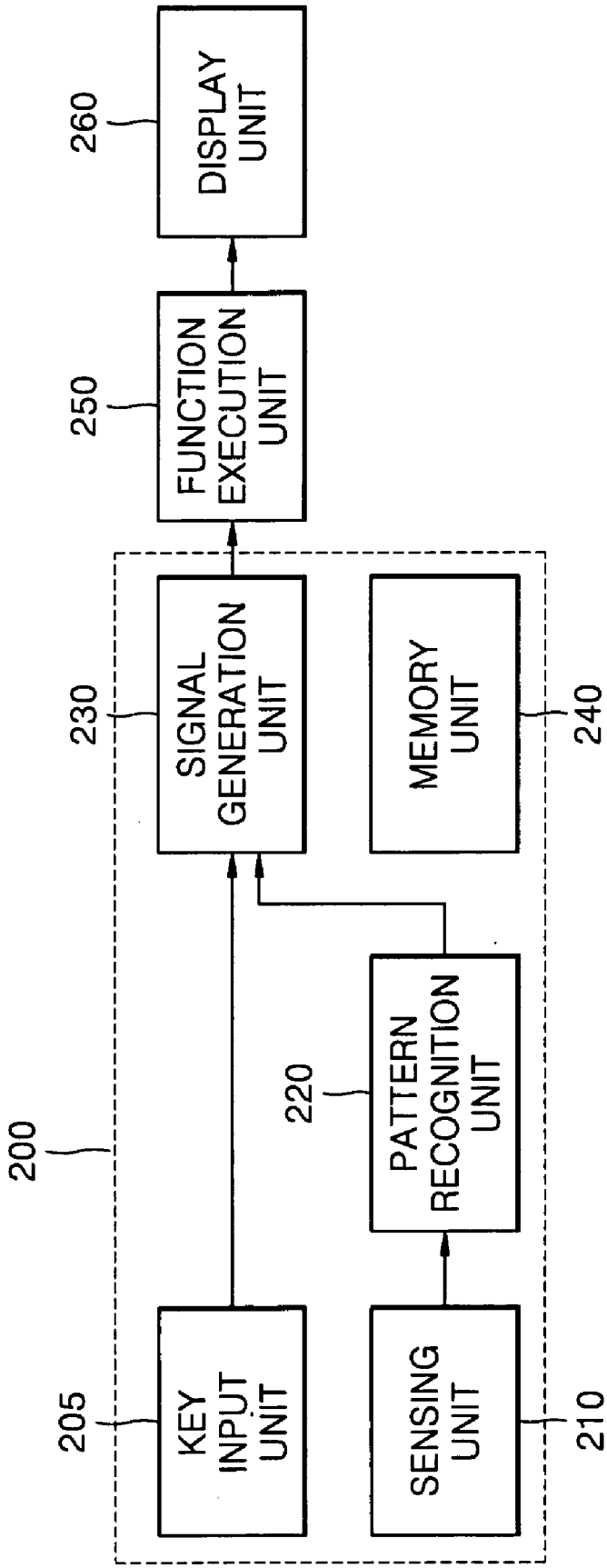
200
205
KEY INPUT UNIT
SENSING UNIT
210
PATTERN RECOGNITION UNIT
220
SIGNAL GENERATION UNIT
230
MEMORY UNIT
240
FUNCTION EXECUTION UNIT
250
DISPLAY UNIT
260