US 20070165004A1

(19) United States

(12) Patent Application Publication

(10) Pub. No.: US 2007/0165004 A1

(43) Pub. Date: Jul. 19, 2007

Seelhammer et al.

(54) CAPACITIVE TOUCH SENSOR WITH INTEGRAL EL BACKLIGHT

(75) Inventors: **Mark A. Seelhammer**, Chandler, AZ (US); **Alan C. Thomas**, Gilbert, AZ (US); **David G. Pires**, Phoenix, AZ (US); **Walter J. Paciorek**, Phoenix, AZ (US)

Correspondence Address:
Paul F. Wille
Cantor Colburn LLP
55 Griffin Road South
Bloomfield, CT 06002 (US)

(73) Assignee: **World Properties, Inc.**, Lincolnwood, IL

(21) Appl. No.: **11/333,166**

(22) Filed: **Jan. 17, 2006**

Publication Classification

(51) **Int. Cl.**
G06F 3/041 (2006.01)

(52) **U.S. Cl.** **345/173**

(57) **ABSTRACT**
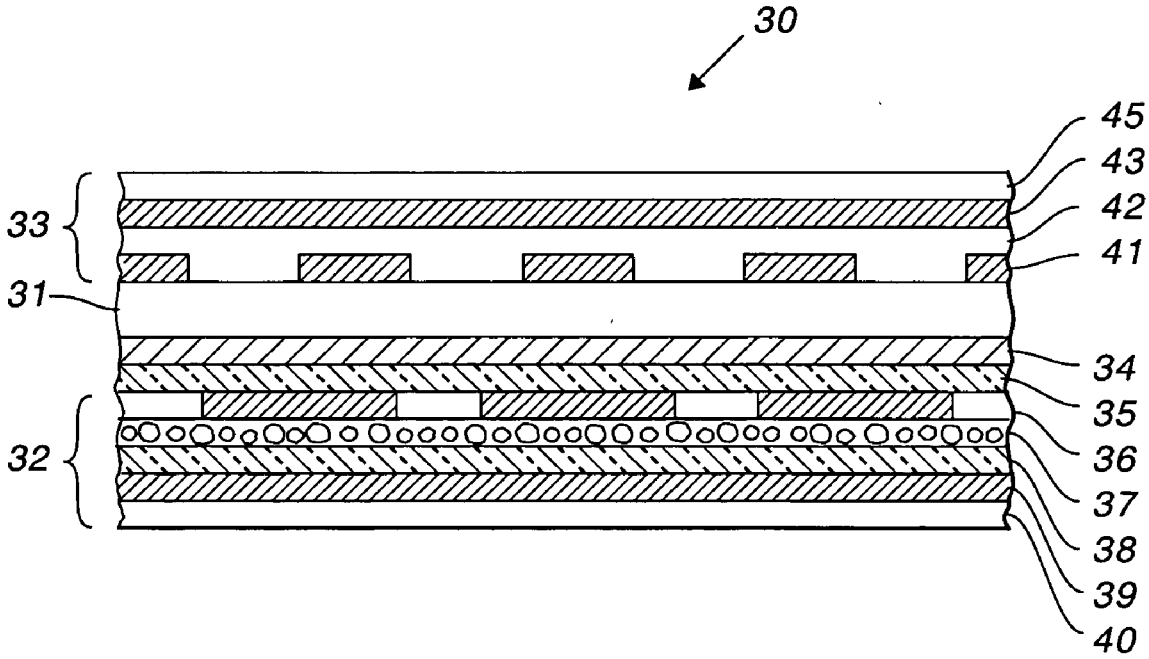
A personal electronic device includes a programmable display and a programmable keypad, wherein at least one of the programmable display and the programmable keypad includes a capacitive touch sensor and an EL panel in a unitary structure. A conductive layer shields the capacitive touch sensor from the EL panel and can be a separate layer or be incorporated into either the capacitive sensor or the EL panel. The conductive layer includes antimony tin oxide (ATO), other conductive oxide, or a conductive polymer, such as Orgacon™ 3010.