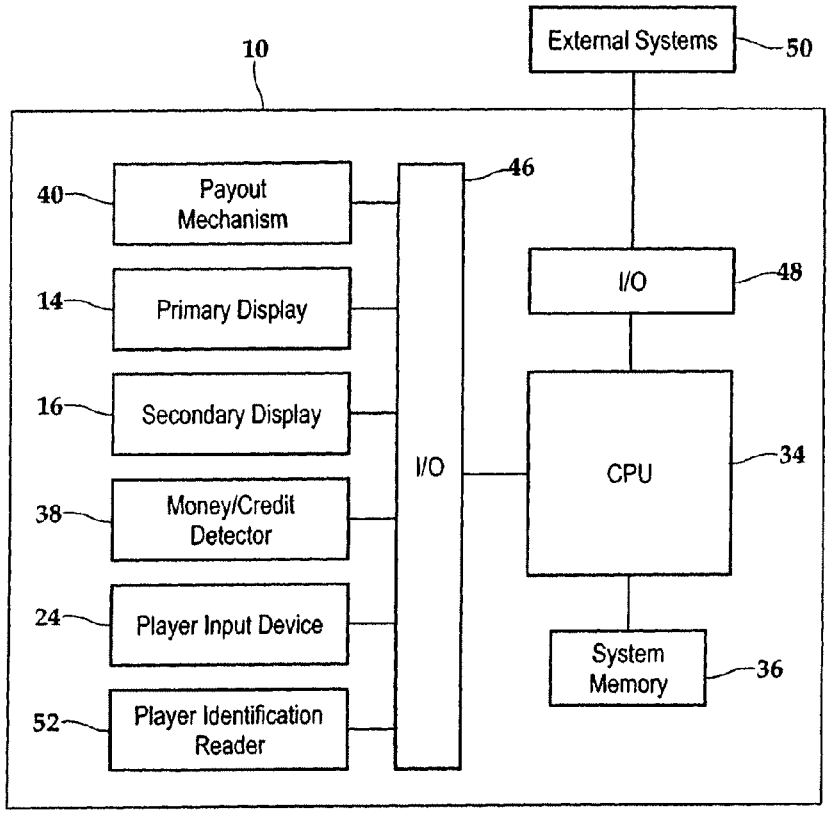
10
External Systems
50
40
Payout Mechanism
46
14
Primary Display
I/O
48
16
Secondary Display
I/O
CPU
34
38
Money/Credit Detector
24
Player Input Device
System Memory
36
52
Player Identification Reader

Fig 2.