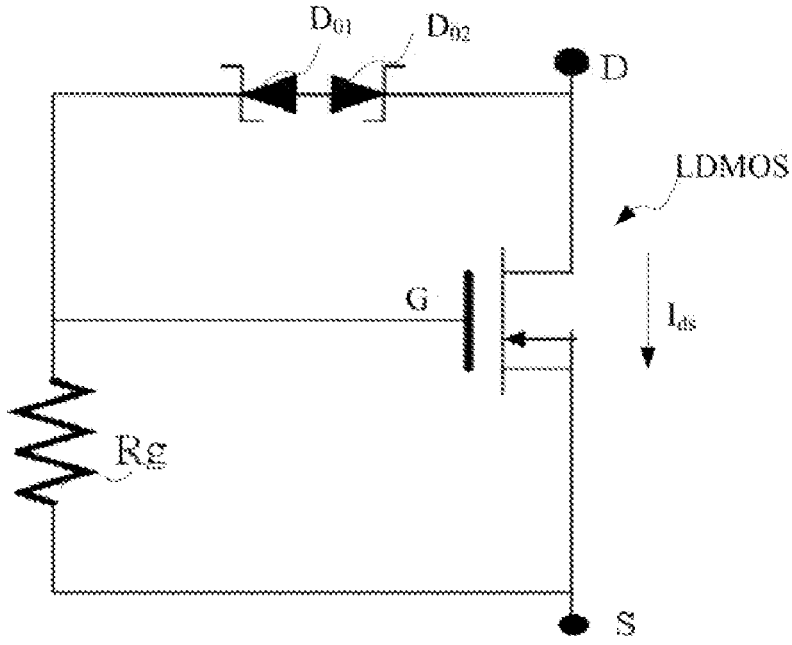
D01
D02
D
LDMOS
G
Ids
Rg
S

Fig. 1

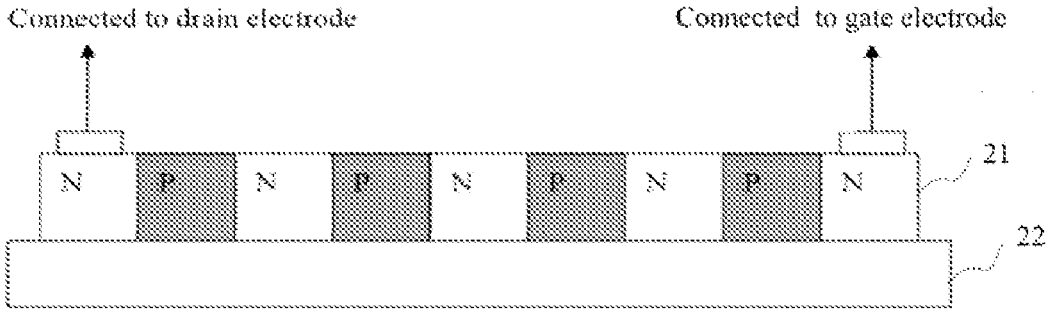
Connected to drain electrode
Connected to gate electrode
N
P
N
P
N
P
N
P
N
21
22

Fig. 2