US 20160264304A1

(19) United States

(12) Patent Application Publication

KORINEK et al.

(10) Pub. No.: US 2016/0264304 A1

(43) Pub. Date: Sep. 15, 2016

(54) **BAG**

(71) Applicant: **Apple Inc.**, Cupertino, CA (US)

(72) Inventors: **Michael KORINEK**, San Francisco, CA (US); **Eugene Antony WHANG**, San Francisco, CA (US); **Benjamin Andrew SHAFFER**, San Jose, CA (US)

(21) Appl. No.: **15/062,993**

(22) Filed: **Mar. 7, 2016**

Related U.S. Application Data

(63) Continuation of application No. 62/130,054, filed on Mar. 9, 2015.

Publication Classification

(51) **Int. Cl.**

B65D 33/12	(2006.01)
B65D 30/20	(2006.01)
B65D 33/02	(2006.01)

(52) **U.S. Cl.**

CPC ***B65D 33/12*** (2013.01); ***B65D 33/02*** (2013.01); ***B65D 31/10*** (2013.01)

(57) **ABSTRACT**
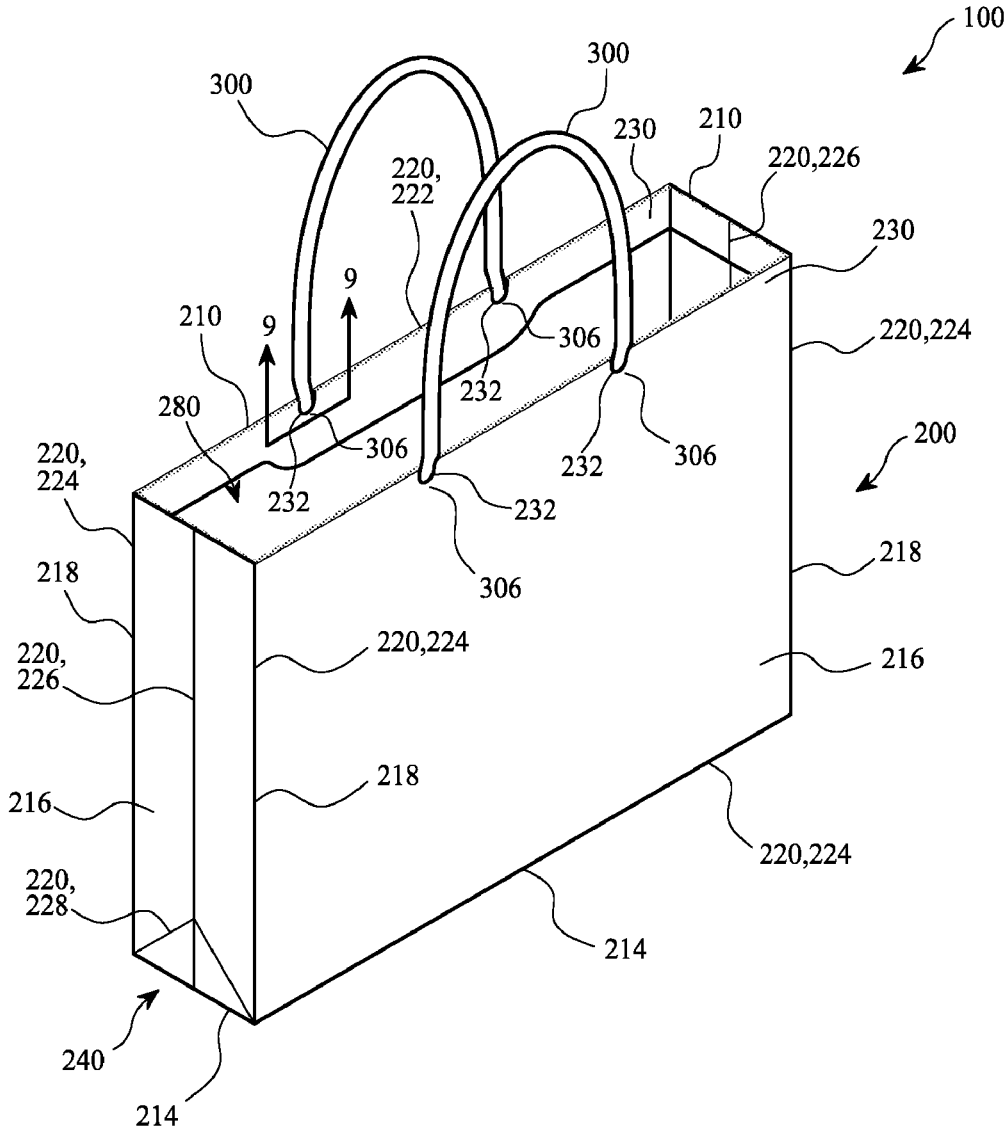
A paper bag is disclosed. The paper bag may include a bag container formed of white solid bleached sulfate paper with at least 60% post-consumer content.