[Fig. 12]

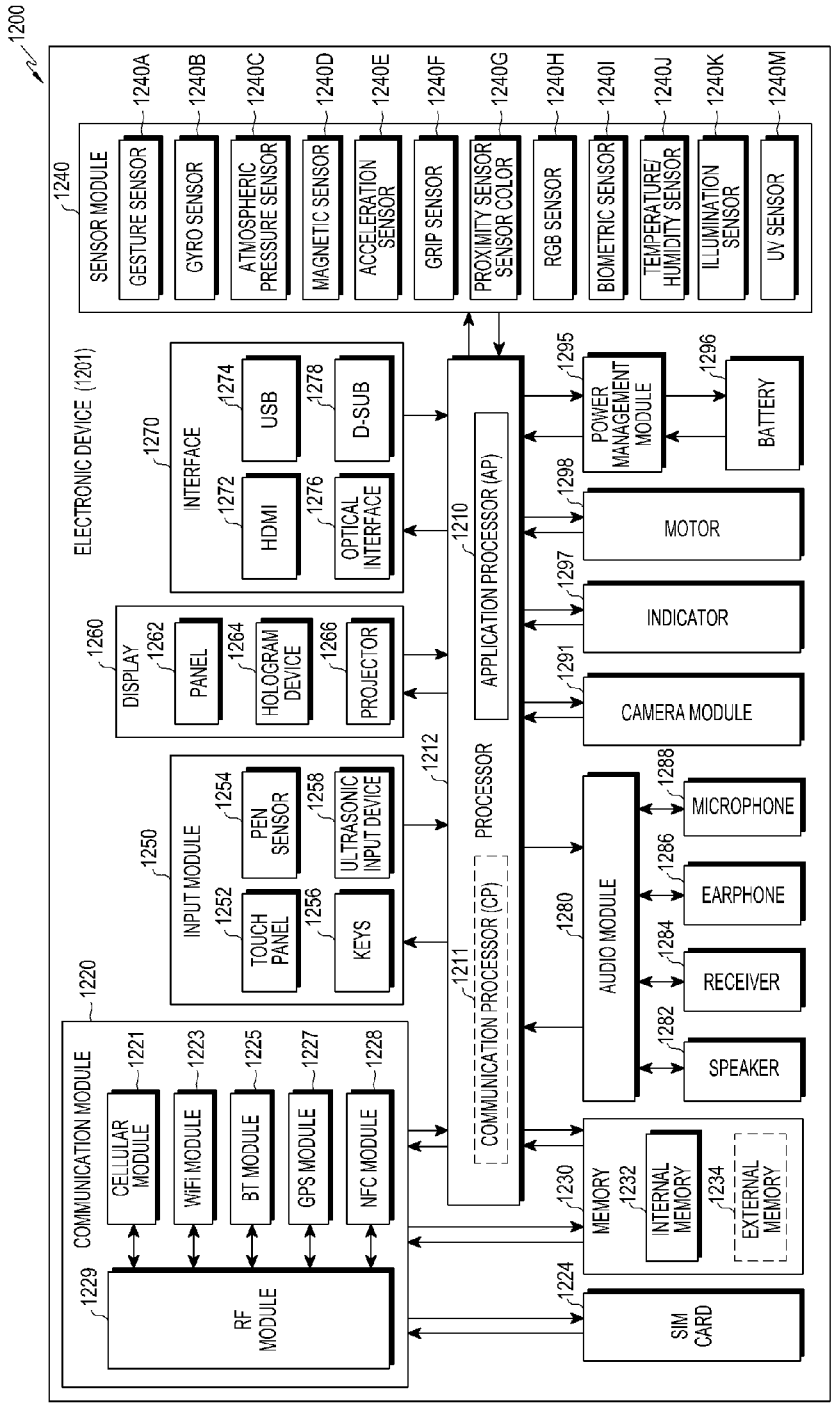
1200
ELECTRONIC DEVICE (1201)
1240
SENSOR MODULE
1240A
GESTURE SENSOR
1240B
GYRO SENSOR
1240C
ATMOSPHERIC PRESSURE SENSOR
1240D
MAGNETIC SENSOR
1240E
ACCELERATION SENSOR
1240F
GRIP SENSOR
1240G
PROXIMITY SENSOR SENSOR COLOR
1240H
RGB SENSOR
1240I
BIOMETRIC SENSOR
1240J
TEMPERATURE/ HUMIDITY SENSOR
1240K
ILLUMINATION SENSOR
1240M
UV SENSOR
1270
INTERFACE
1272
HDMI
1274
USB
1276
OPTICAL INTERFACE
1278
D-SUB
1260
DISPLAY
1262
PANEL
1264
HOLOGRAM DEVICE
1266
PROJECTOR
1250
INPUT MODULE
1252
TOUCH PANEL
1254
PEN SENSOR
1256
KEYS
1258
ULTRASONIC INPUT DEVICE
1220
COMMUNICATION MODULE
1221
CELLULAR MODULE
1223
WiFi MODULE
1225
BT MODULE
1227
GPS MODULE
1228
NFC MODULE
1229
RF MODULE
1212
PROCESSOR
1210
APPLICATION PROCESSOR (AP)
1211
COMMUNICATION PROCESSOR (CP)
1295
POWER MANAGEMENT MODULE
1296
BATTERY
1298
MOTOR
1297
INDICATOR
1291
CAMERA MODULE
1280
AUDIO MODULE
1288
MICROPHONE
1286
EARPHONE
1284
RECEIVER
1282
SPEAKER
1230
MEMORY
1232
INTERNAL MEMORY
1234
EXTERNAL MEMORY
1224
SIM CARD