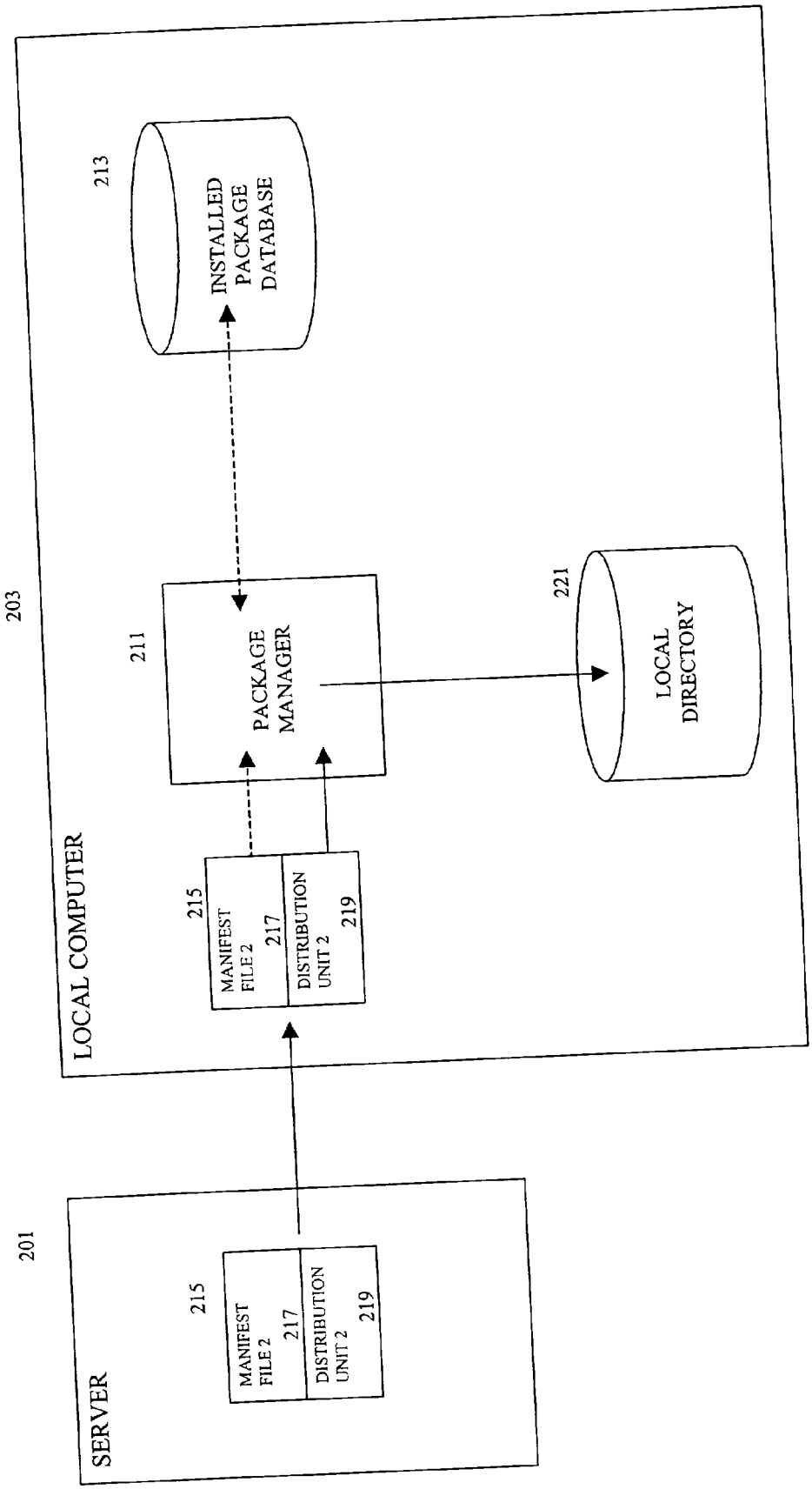
201
SERVER
215
MANIFEST FILE 2
217
DISTRIBUTION UNIT 2
219
203
LOCAL COMPUTER
215
MANIFEST FILE 2
217
DISTRIBUTION UNIT 2
219
211
PACKAGE MANAGER
213
INSTALLED PACKAGE DATABASE
221
LOCAL DIRECTORY

FIG. 2B