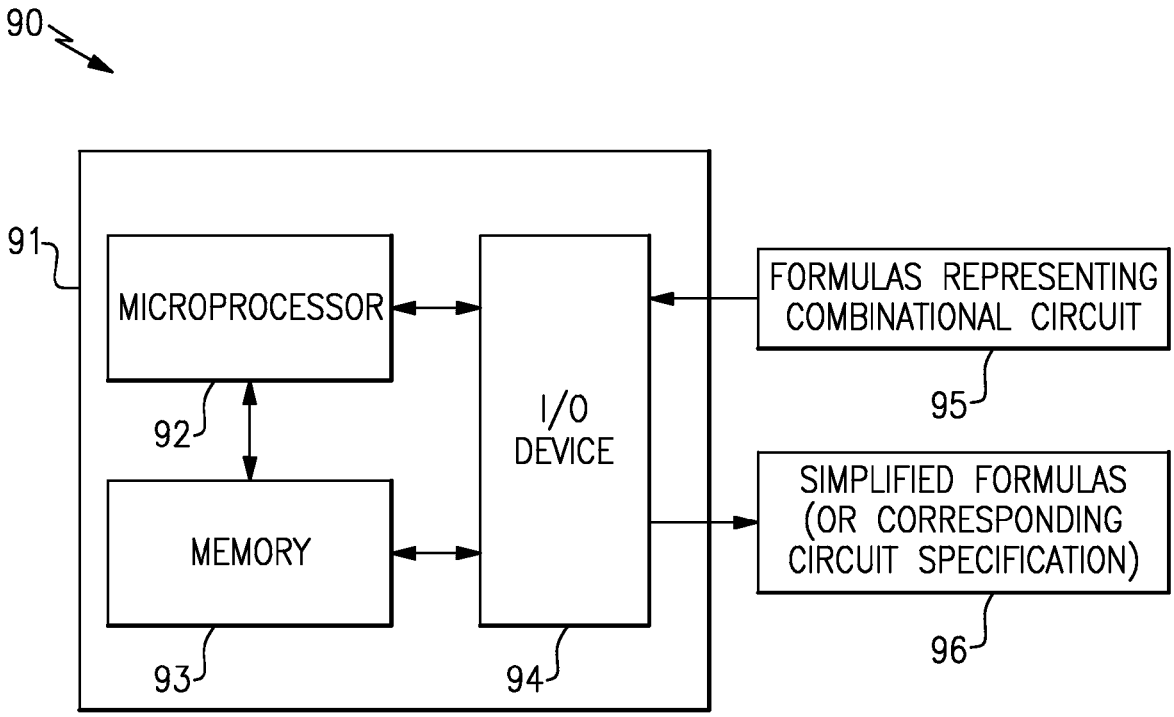
90
91
MICROPROCESSOR
92
MEMORY
93
I/O
DEVICE
94
FORMULAS REPRESENTING
COMBINATIONAL CIRCUIT
95
SIMPLIFIED FORMULAS
(OR CORRESPONDING
CIRCUIT SPECIFICATION)
96

FIG.4