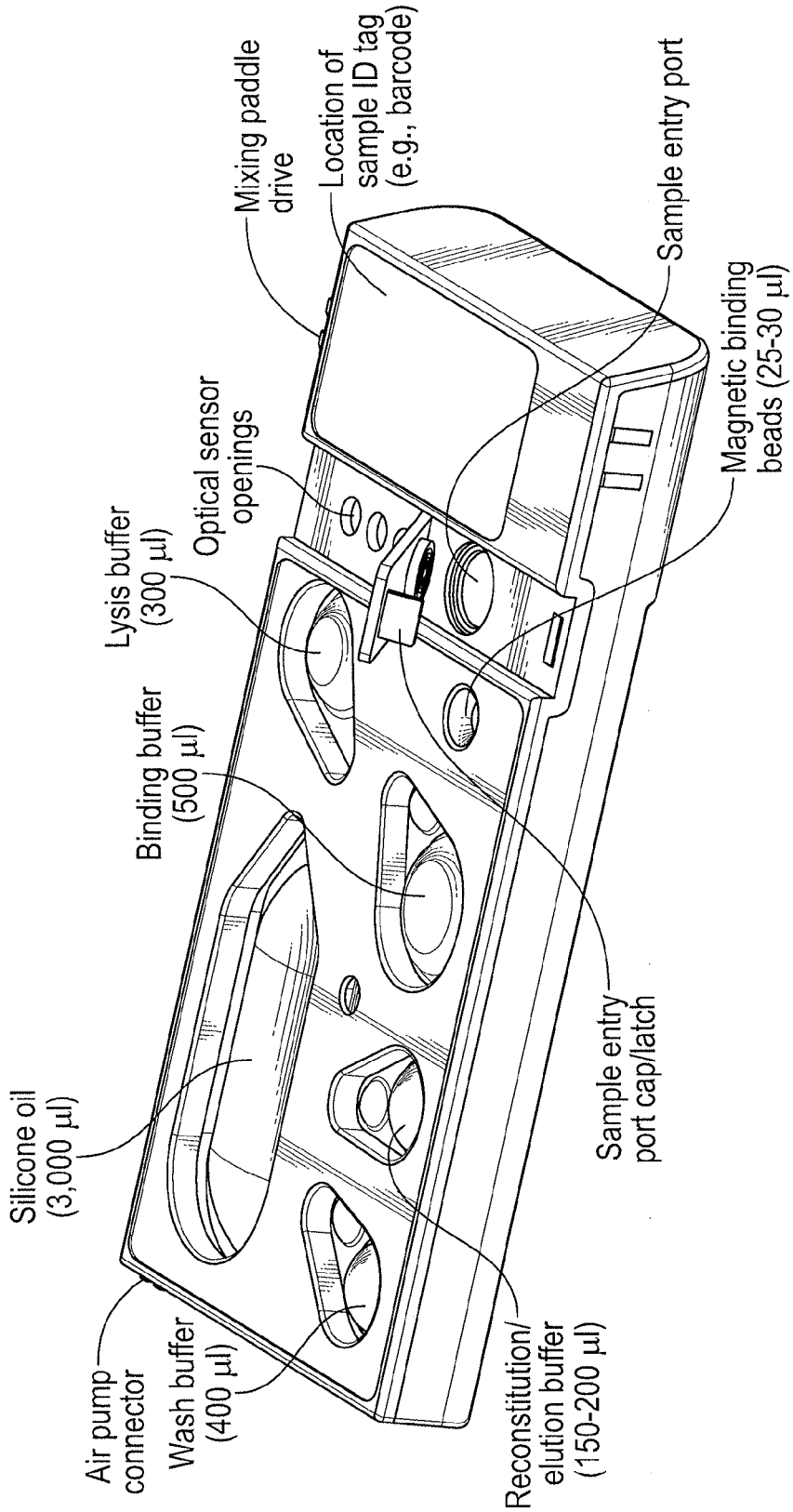
Mixing paddle drive
Location of sample ID tag (e.g., barcode)
Sample entry port
Magnetic binding beads (25-30 µl)
Optical sensor openings
Lysis buffer (300 µl)
Binding buffer (500 µl)
Sample entry port cap/latch
Silicone oil (3,000 µl)
Air pump connector
Wash buffer (400 µl)
Reconstitution/ elution buffer (150-200 µl)

FIG. 20