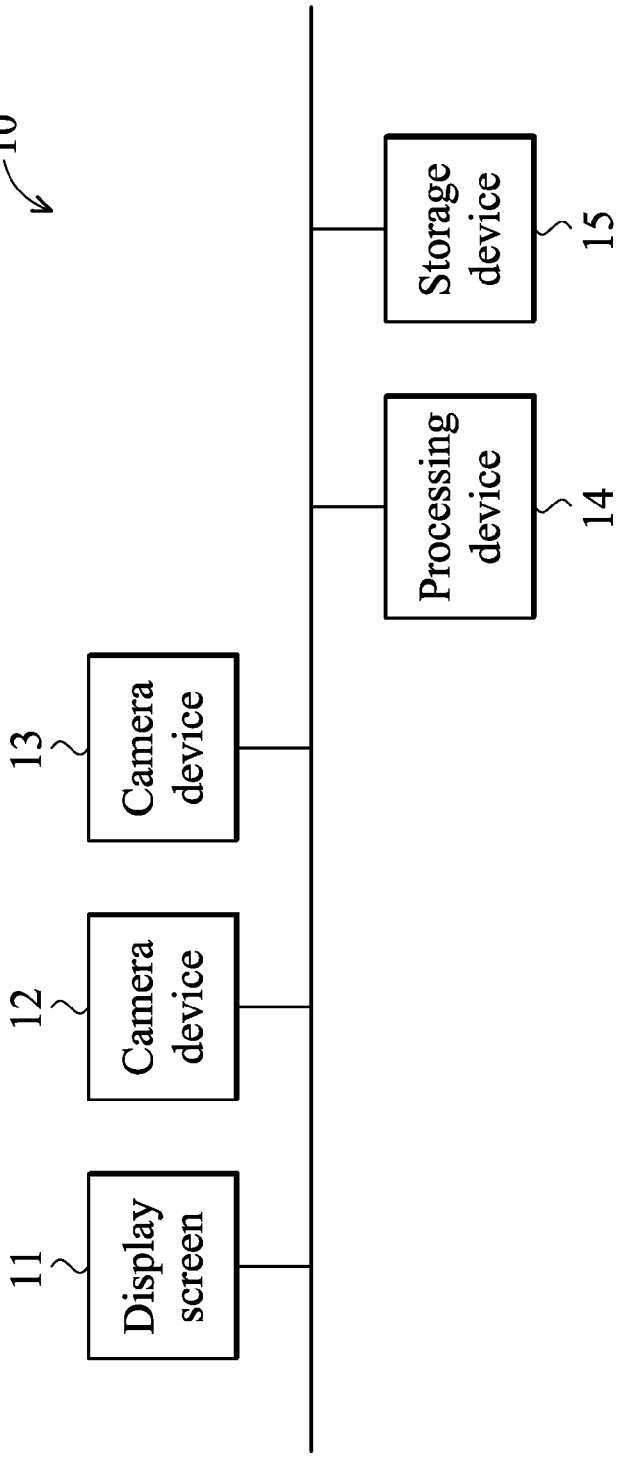
10
11
Display screen
12
Camera device
13
Camera device
Processing device
14
Storage device
15

FIG. 1