FIG. 1

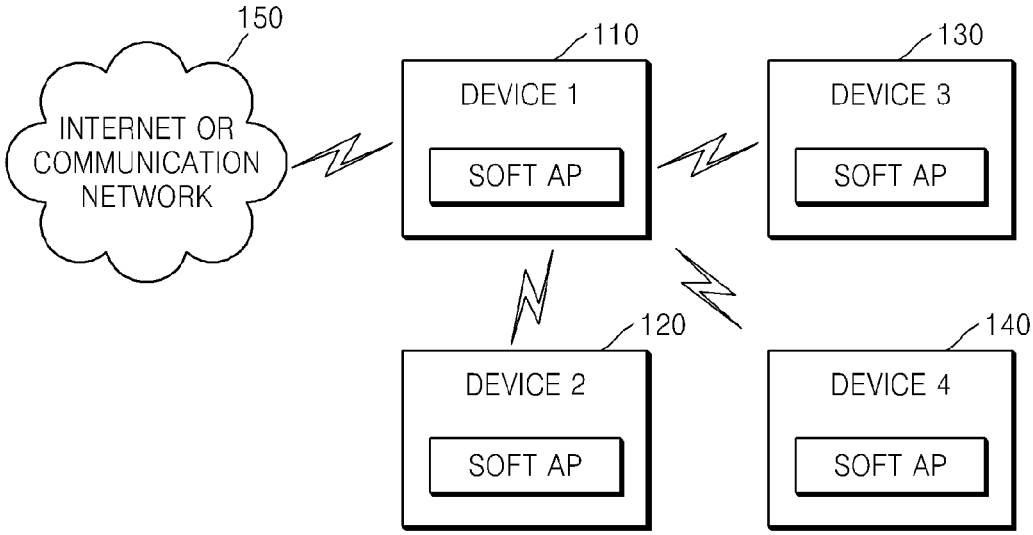
150
INTERNET OR
COMMUNICATION
NETWORK
110
DEVICE 1
SOFT AP
130
DEVICE 3
SOFT AP
120
DEVICE 2
SOFT AP
140
DEVICE 4
SOFT AP