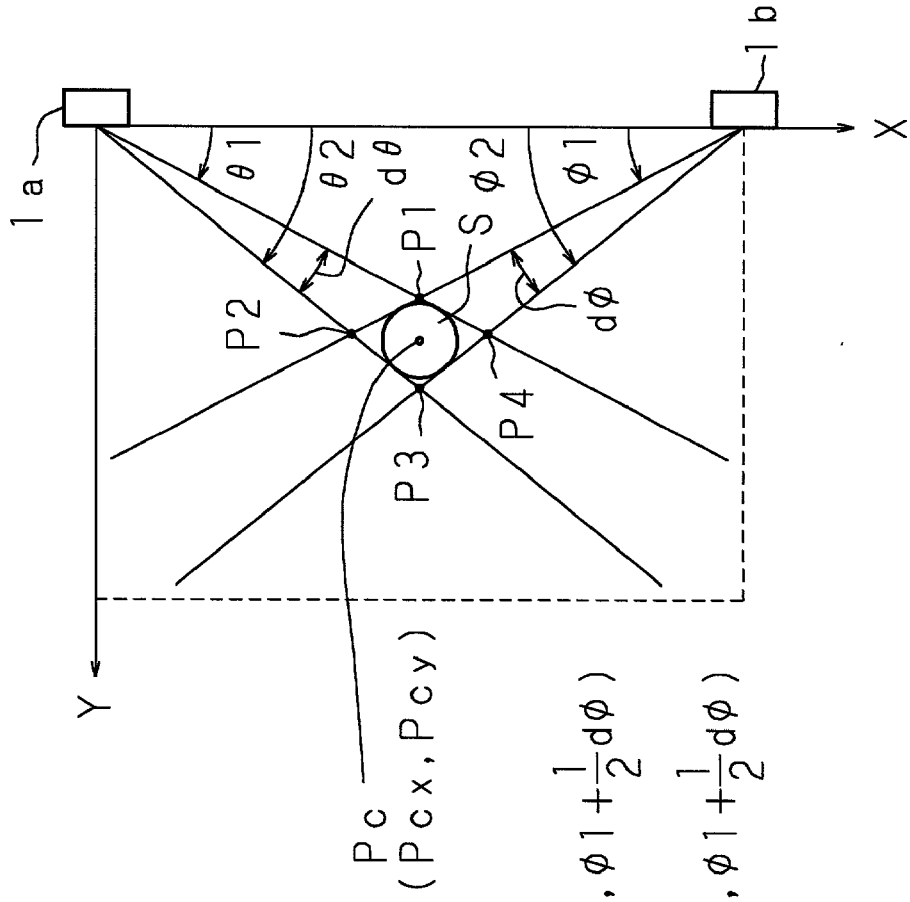

$$\begin{cases} Pcx(\theta,\phi)=Pcx\left(\theta 1+\frac{1}{2}d\theta,\ \phi 1+\frac{1}{2}d\phi\right) \\ Pcy(\theta,\phi)=Pcy\left(\theta 1+\frac{1}{2}d\theta,\ \phi 1+\frac{1}{2}d\phi\right) \end{cases}$$

FIG. 19