US 20040178006A1

(19) United States

(12) Patent Application Publication

(10) Pub. No.: US 2004/0178006 A1

(43) Pub. Date: Sep. 16, 2004

Cok

(54) RESISTIVE TOUCH SCREEN WITH VARIABLE RESISTIVITY LAYER

(75) Inventor: **Ronald S. Cok**, Rochester, NY (US)

Correspondence Address:
Thomas H. Close
Patent Legal Staff
Eastman Kodak Company
343 State Street
Rochester, NY 14650-2201 (US)

(73) Assignee: **Eastman Kodak Company**

(21) Appl. No.: **10/385,878**

(22) Filed: **Mar. 11, 2003**

Publication Classification

(51) **Int. Cl.**[7] **G06K 11/06**

(52) **U.S. Cl.** **178/18.01**

(57) **ABSTRACT**
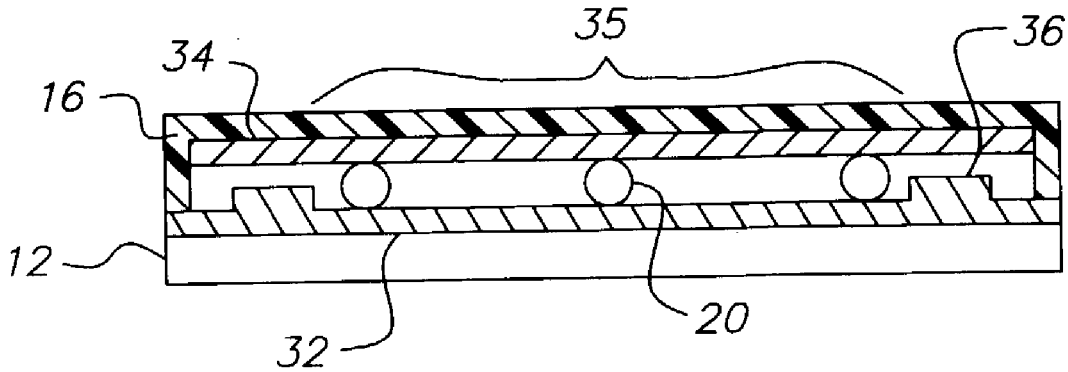
A resistive touch screen includes a transparent substrate defining a touch area; a first layer of conductive material formed on the transparent substrate and extending over the touch area; an electrical connection to the first layer of conductive material; a transparent flexible cover sheet; a second layer of conductive material formed on the transparent flexible cover sheet, the cover sheet being mounted in a spaced apart relationship from the substrate, whereby a touch in the touch area results in an a electrical contact between the first and second layers of conductive material at the point of touch; an electrical connection to the second layer of conductive material; and at least one of the first or second layers of conductive material having a variable conductivity.