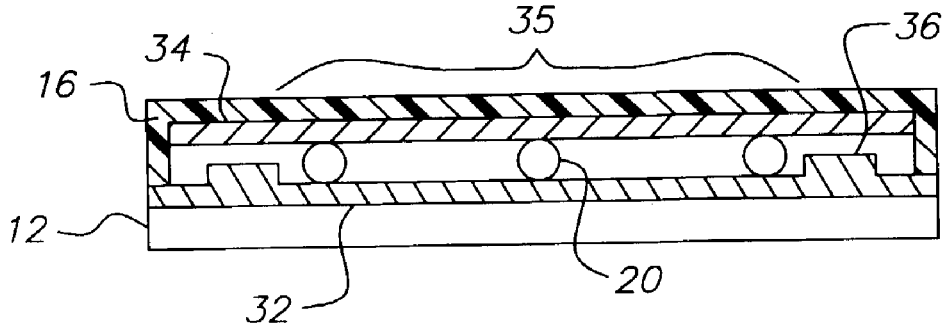

FIG. 1

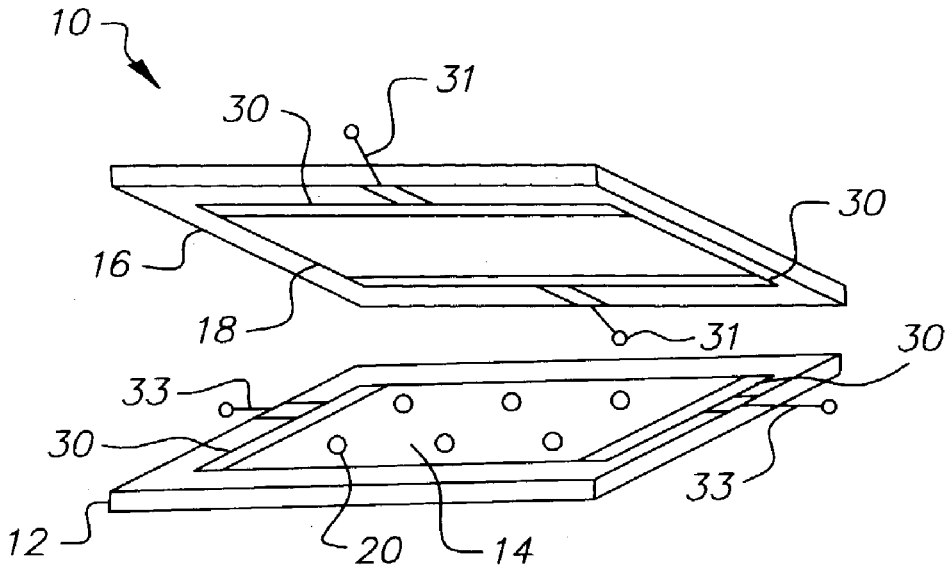

FIG. 2

(PRIOR ART)