FIGURE 6A

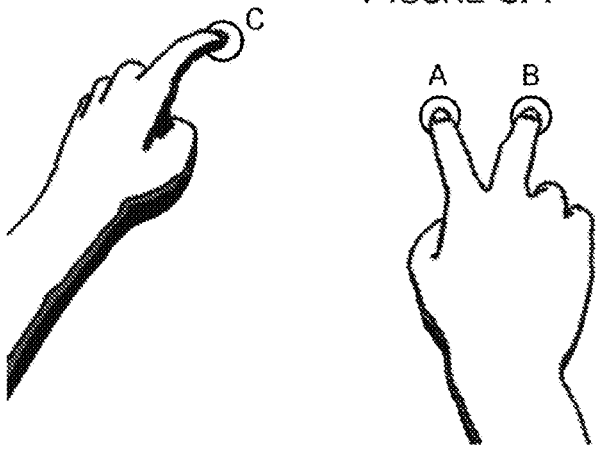

FIGURE 6B

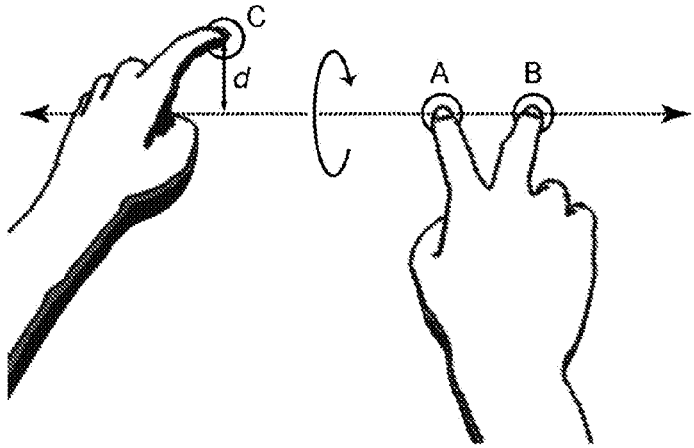

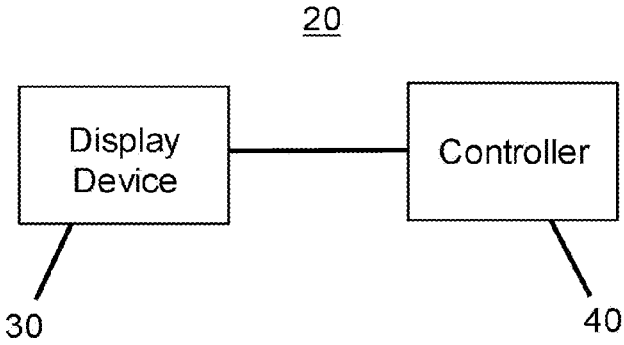

FIGURE 7