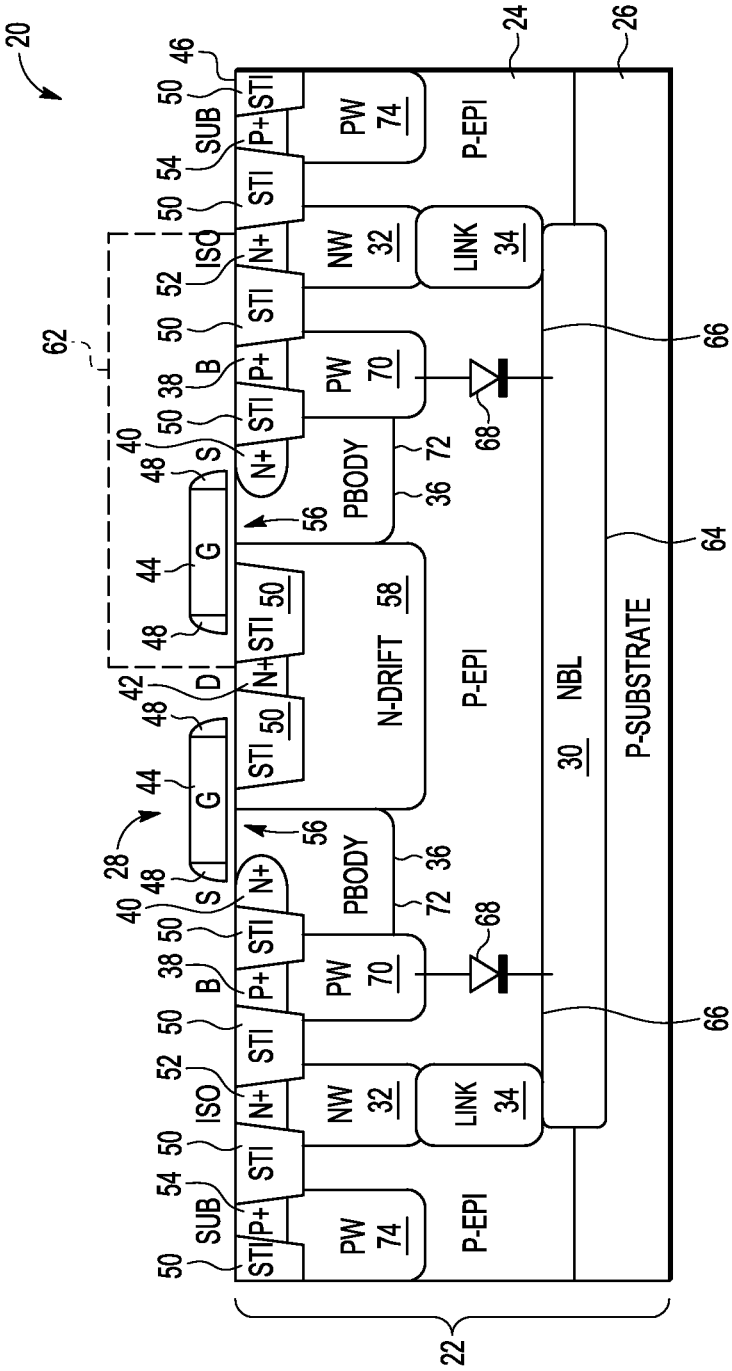
20
24
26
46
50
SUB
54
STI
P+
PW
74
P-EPI
ISO
52
N+
NW
32
LINK
34
62
38
B
PW
70
68
66
40
S
48
G
44
PBODY
72
36
56
N-DRIFT
58
42
D
28
NBL
30
P-SUBSTRATE
64
22

FIG. 1