FIG. 1

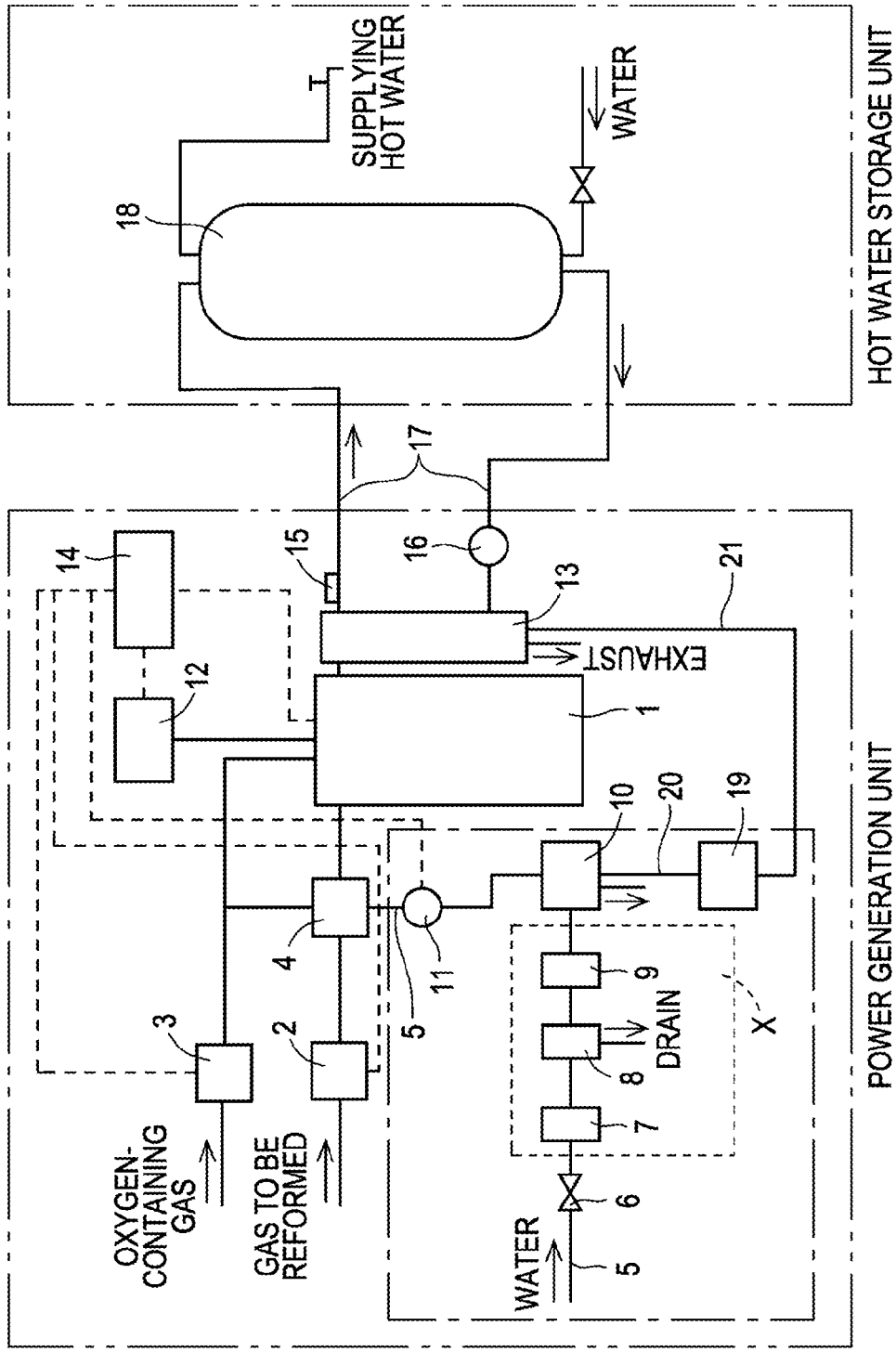
HOT WATER STORAGE UNIT
SUPPLYING HOT WATER
WATER
18
17
16
15
14
13
12
21
EXHAUST
1
10
20
19
4
11
5
3
2
9
8
7
6
DRAIN
X
OXYGEN-CONTAINING GAS
GAS TO BE REFORMED
WATER
POWER GENERATION UNIT