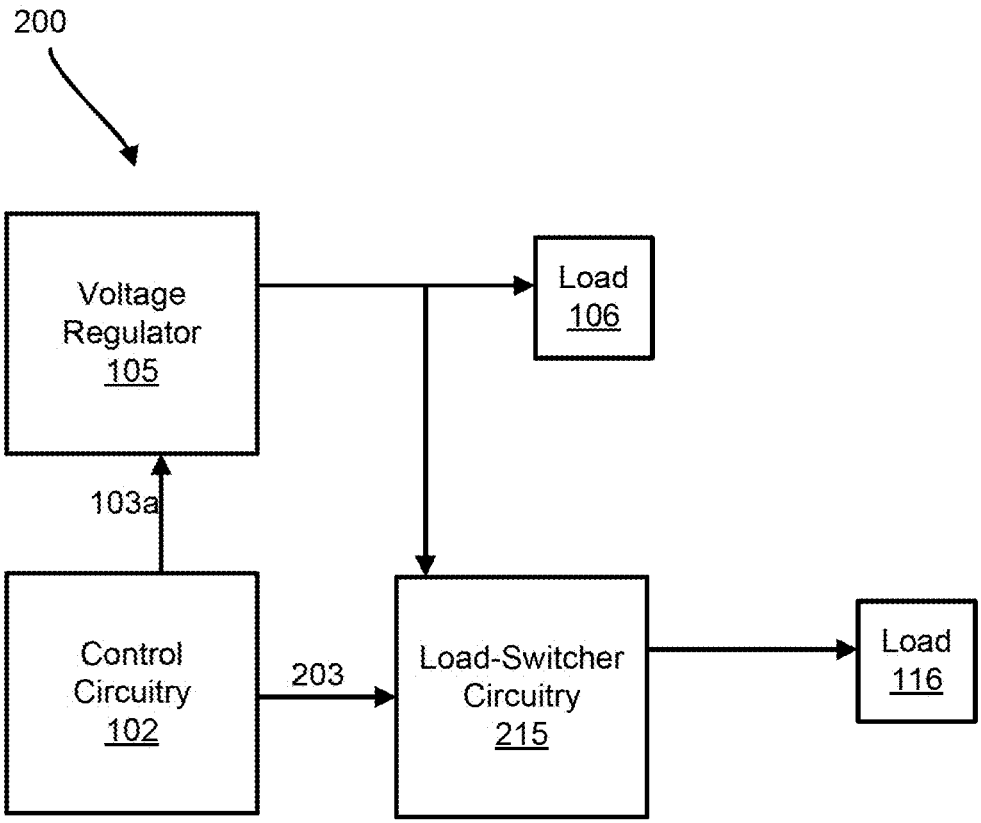
200
Voltage Regulator 105
Load 106
103a
Control Circuitry 102
203
Load-Switcher Circuitry 215
Load 116

FIG. 2