Fig. 9

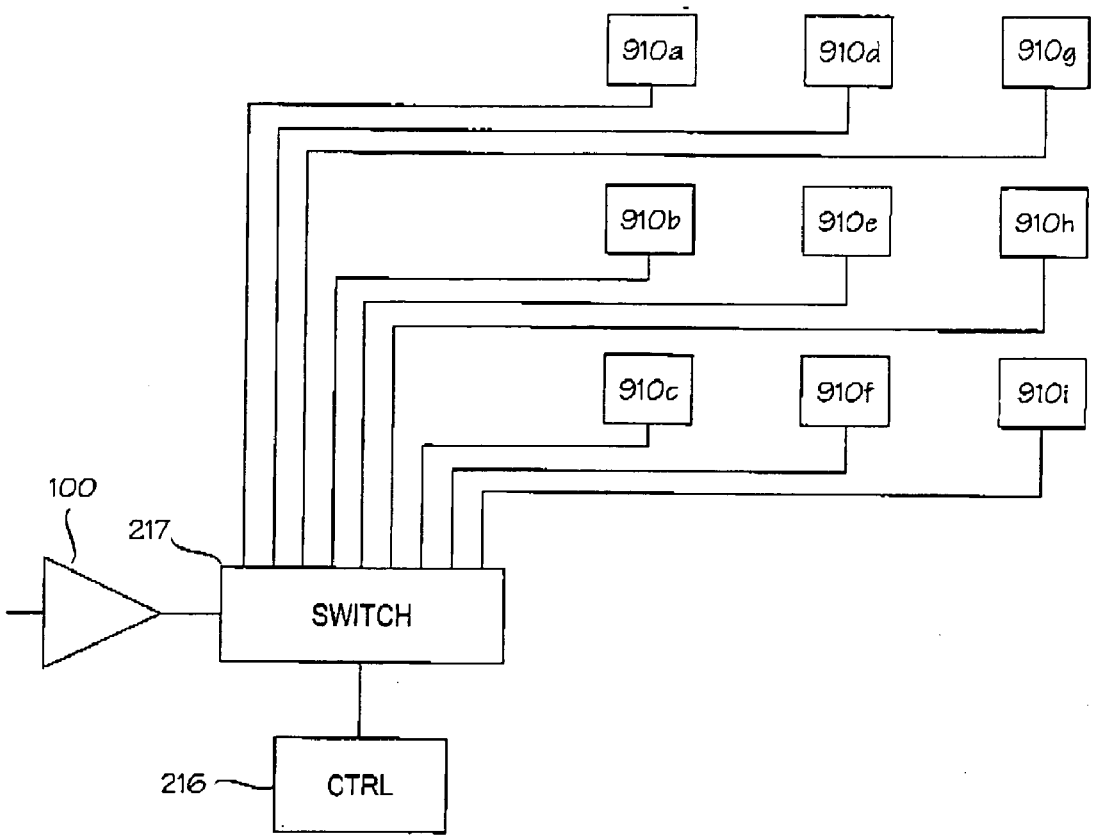
910a
910d
910g
910b
910e
910h
910c
910f
910i
100
217
SWITCH
216
CTRL

Fig. 10

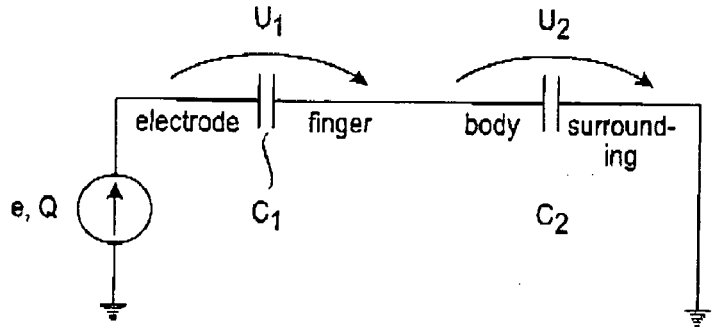
U1
U2
electrode
finger
body
surround-
ing
e, Q
C1
C2