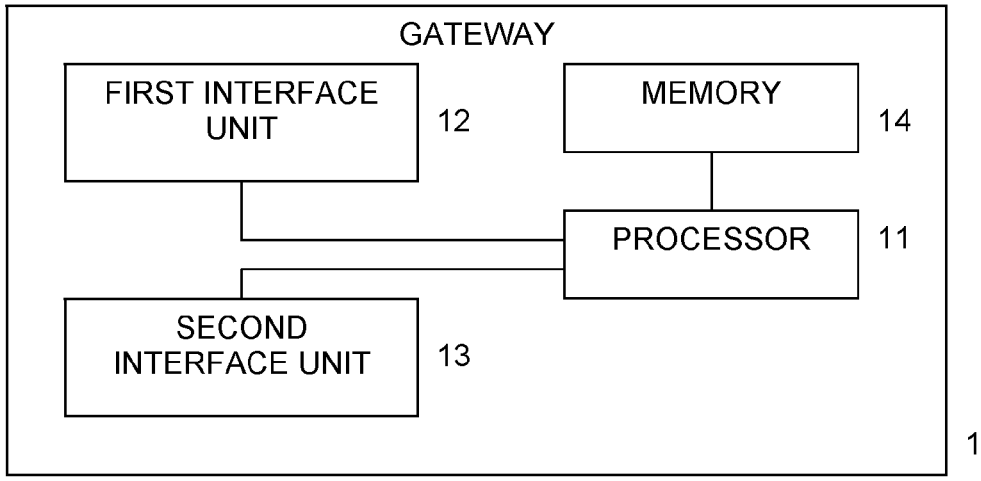
GATEWAY
FIRST INTERFACE UNIT
12
MEMORY
14
PROCESSOR
11
SECOND INTERFACE UNIT
13
1

Fig. 1

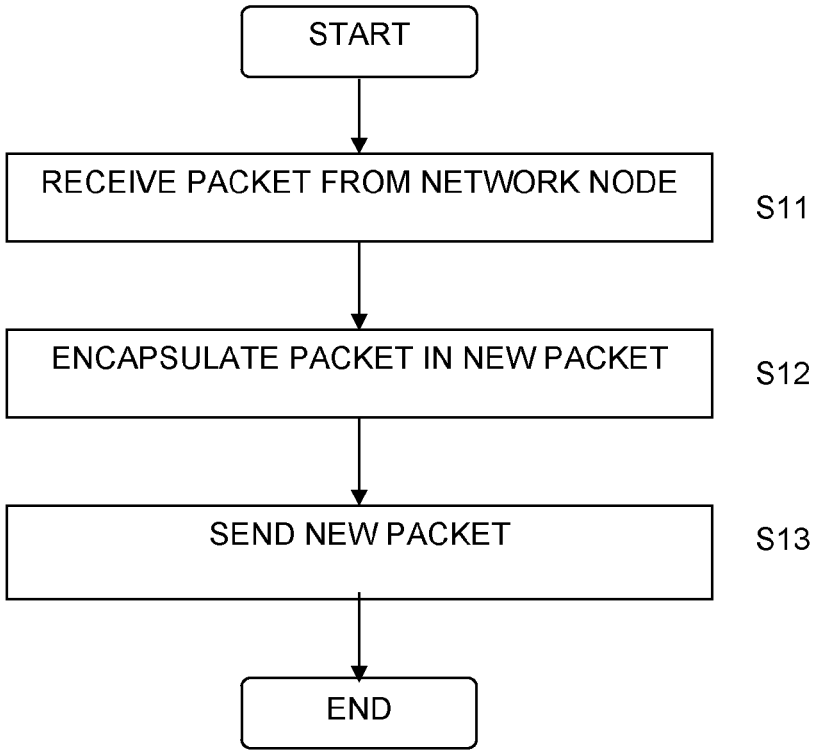
START
RECEIVE PACKET FROM NETWORK NODE
S11
ENCAPSULATE PACKET IN NEW PACKET
S12
SEND NEW PACKET
S13
END

Fig. 2A