US 20170101307A1

(19) United States

(12) Patent Application Publication

(10) Pub. No.: US 2017/0101307 A1

(43) Pub. Date: Apr. 13, 2017

LIM et al.

(54) **SEMICONDUCTOR PACKAGE**

(71) Applicant: **SAMSUNG ELECTRO-MECHANICS CO., LTD.**, Suwon-si (KR)

(72) Inventors: **Chang Hyun LIM**, Suwon-si (KR); **Tae Hun LEE**, Suwon-si (KR); **Dae Hun JEONG**, Suwon-si (KR)

(73) Assignee: **SAMSUNG ELECTRO-MECHANICS CO., LTD.**, Suwon-si (KR)

(21) Appl. No.: **15/181,480**

(22) Filed: **Jun. 14, 2016**

(30) **Foreign Application Priority Data**

Oct. 8, 2015 (KR) 10-2015-0141825

Publication Classification

(51) **Int. Cl.**

B81B 7/00 (2006.01)
G01D 11/24 (2006.01)
H01L 23/053 (2006.01)
H01L 25/16 (2006.01)
H01L 23/00 (2006.01)

(52) **U.S. Cl.**

CPC ***B81B 7/008*** (2013.01); ***H01L 25/16*** (2013.01); ***H01L 24/32*** (2013.01); ***H01L 24/17*** (2013.01); ***H01L 24/48*** (2013.01); ***H01L 24/73*** (2013.01); ***H01L 23/053*** (2013.01); ***G01D 11/245*** (2013.01); *B81B 2201/0235* (2013.01); *B81B 2201/0264* (2013.01); *B81B 2207/012* (2013.01); *H01L 2224/32225* (2013.01); *H01L 2924/1461* (2013.01); *H01L 2924/15153* (2013.01); *H01L 2224/16225* (2013.01); *H01L 2224/16055* (2013.01); *H01L 2224/16057* (2013.01); *H01L 2224/73265* (2013.01); *H01L 2224/2919* (2013.01); *H01L 2224/48091* (2013.01); *H01L 2224/48106* (2013.01); *H01L 2224/48225* (2013.01)

(57) **ABSTRACT**
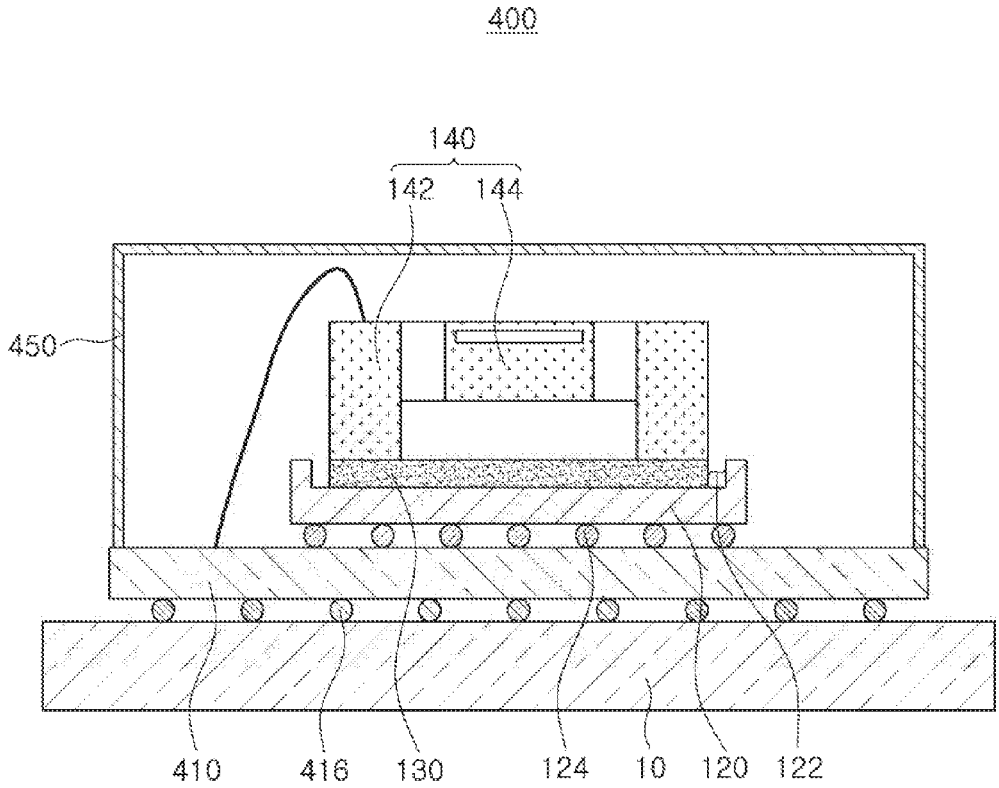
There is provided a semiconductor package that comprises a board; a semiconductor chip disposed on the board and having an installation recess; an adhesive layer disposed within the installation recess; and a sensor unit disposed on the adhesive layer.