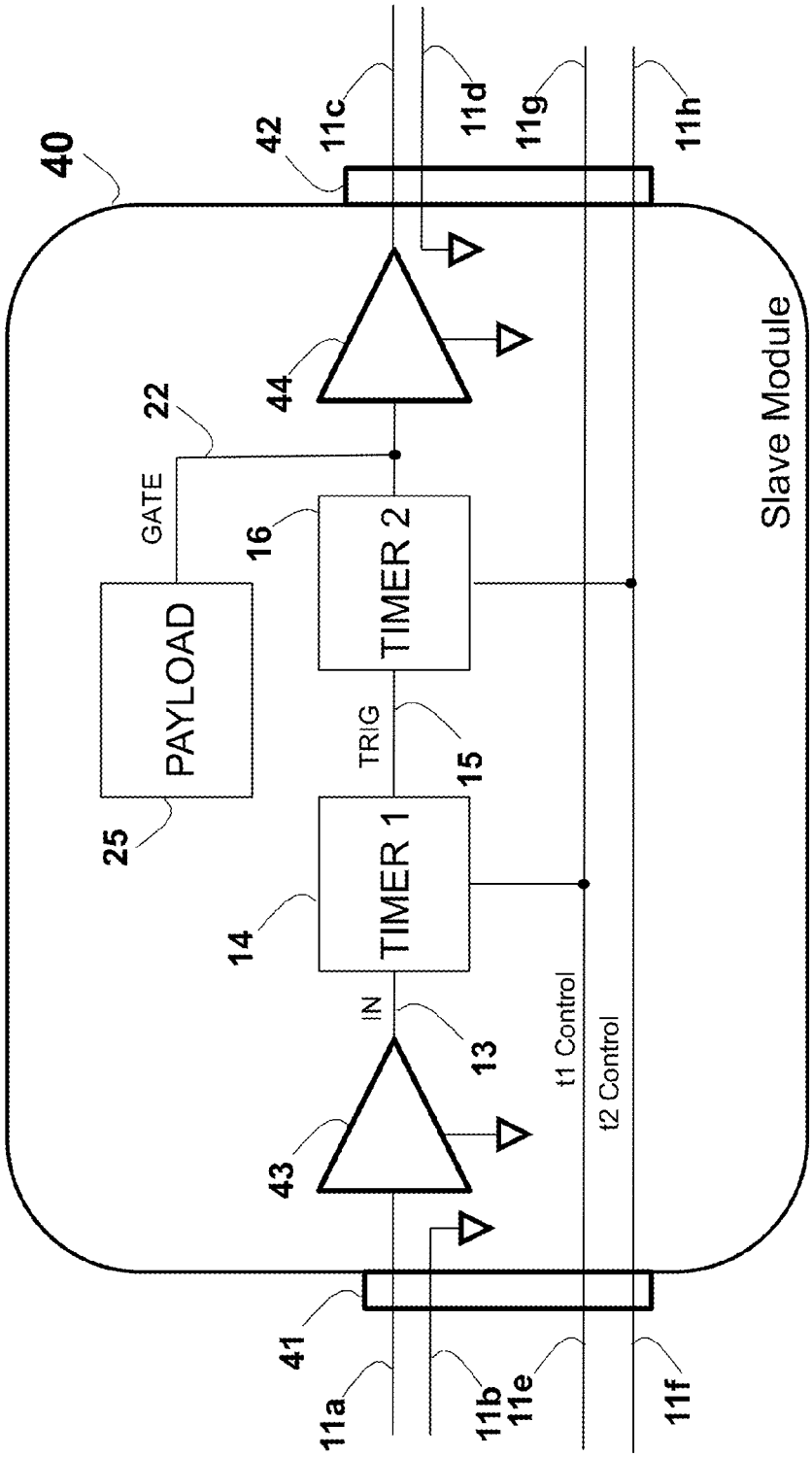
40
42
11c
11d
11g
11h
44
22
GATE
16
TIMER 2
PAYLOAD
25
TRIG
15
TIMER 1
14
IN
13
43
t1 Control
t2 Control
Slave Module
41
11a
11b
11e
11f

FIG. 4