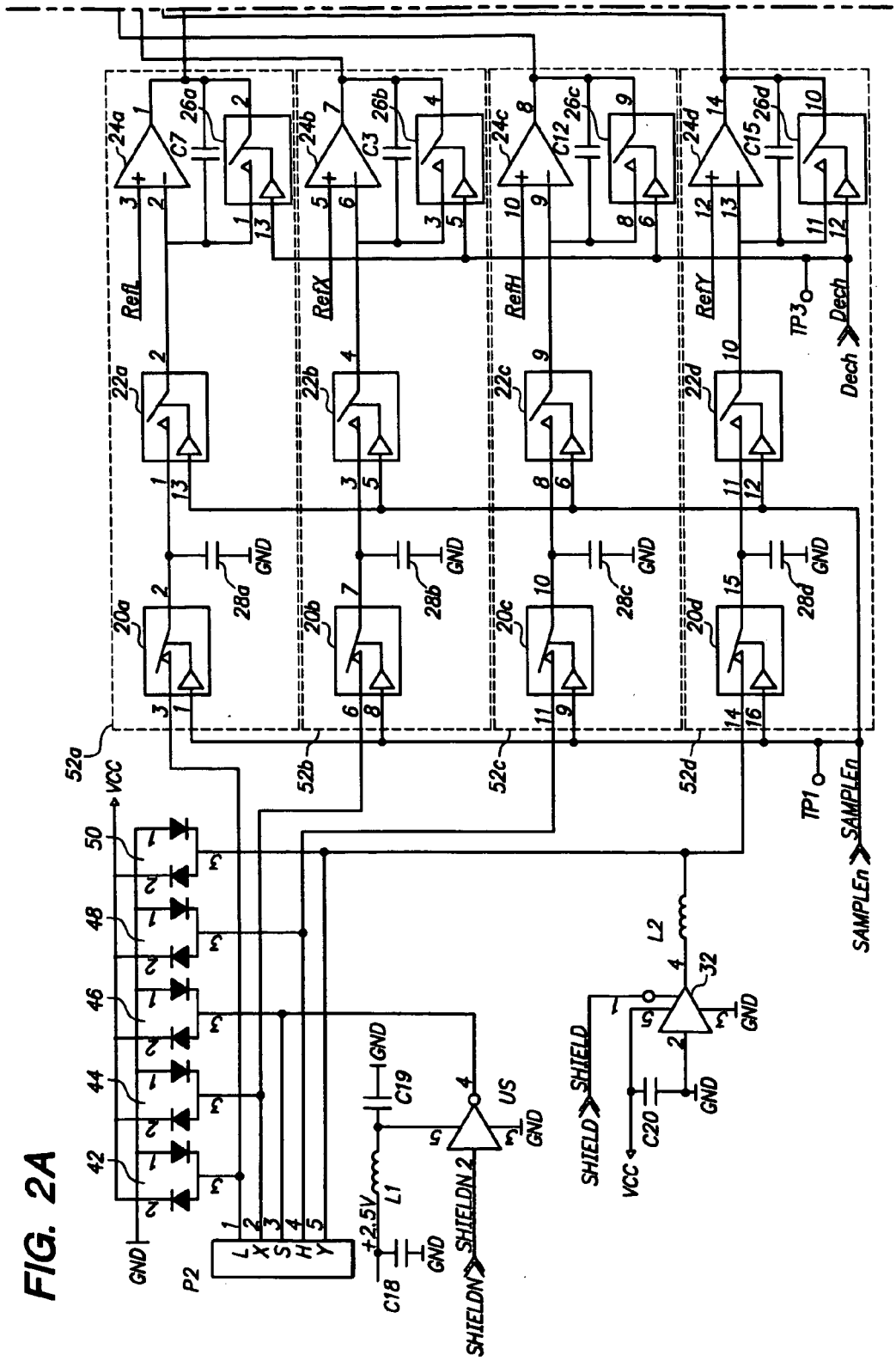
24a
24b
24c
24d
26a
26b
26c
26d
C7
C3
C12
C15
RefL
RefX
RefH
RefY
TP3
Dech
22a
22b
22c
22d
20a
20b
20c
20d
28a
28b
28c
28d
GND
52a
52b
52c
52d
VCC
50
48
46
44
42
TP1
SAMPLEn
L2
32
SHIELD
C20
C19
US
SHIELDN 2
SHIELDN
+2.5V
L1
C18
P2
L
X
S
H
Y

FIG. 2A