FIG. 3B

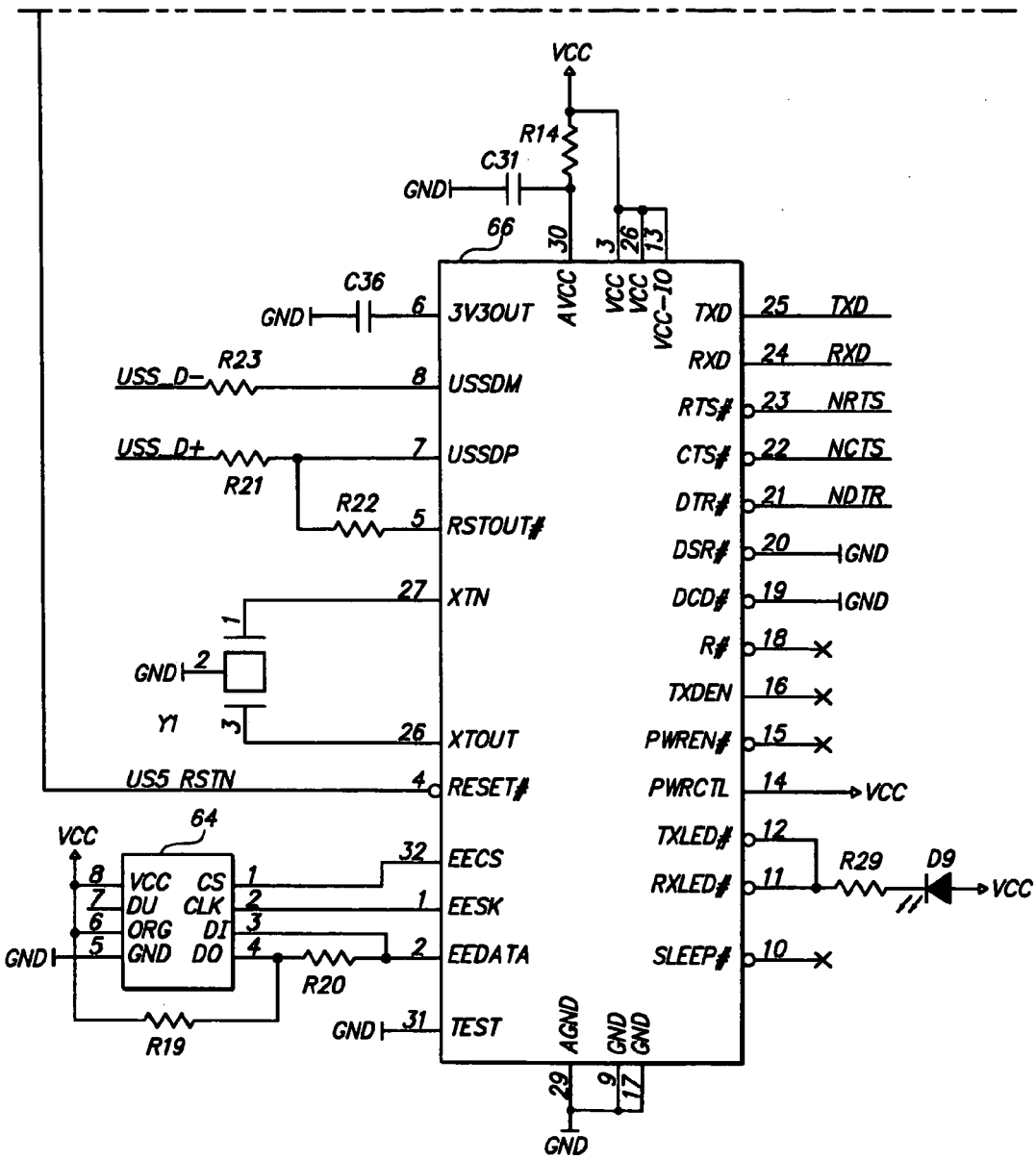
VCC
R14
C31
GND
66
30
3
26
13
AVCC
VCC
VCC
VCC-IO
C36
GND
6
3V3OUT
USS_D-
R23
8
USSDM
USS_D+
7
USSDP
R21
R22
5
RSTOUT#
27
XTN
GND
2
Y1
26
XTOUT
US5 RSTN
4
RESET#
64
VCC
8
VCC
CS
1
7
DU
CLK
2
6
ORG
DI
3
5
GND
DO
4
GND
32
EECS
1
EESK
2
EEDATA
R20
R19
GND
31
TEST
AGND
GND
GND
29
9
17
GND
TXD
25
TXD
RXD
24
RXD
RTS#
23
NRTS
CTS#
22
NCTS
DTR#
21
NDTR
DSR#
20
GND
DCD#
19
GND
R#
18
TXDEN
16
PWREN#
15
PWRCTL
14
VCC
TXLED#
12
RXLED#
11
R29
D9
VCC
SLEEP#
10