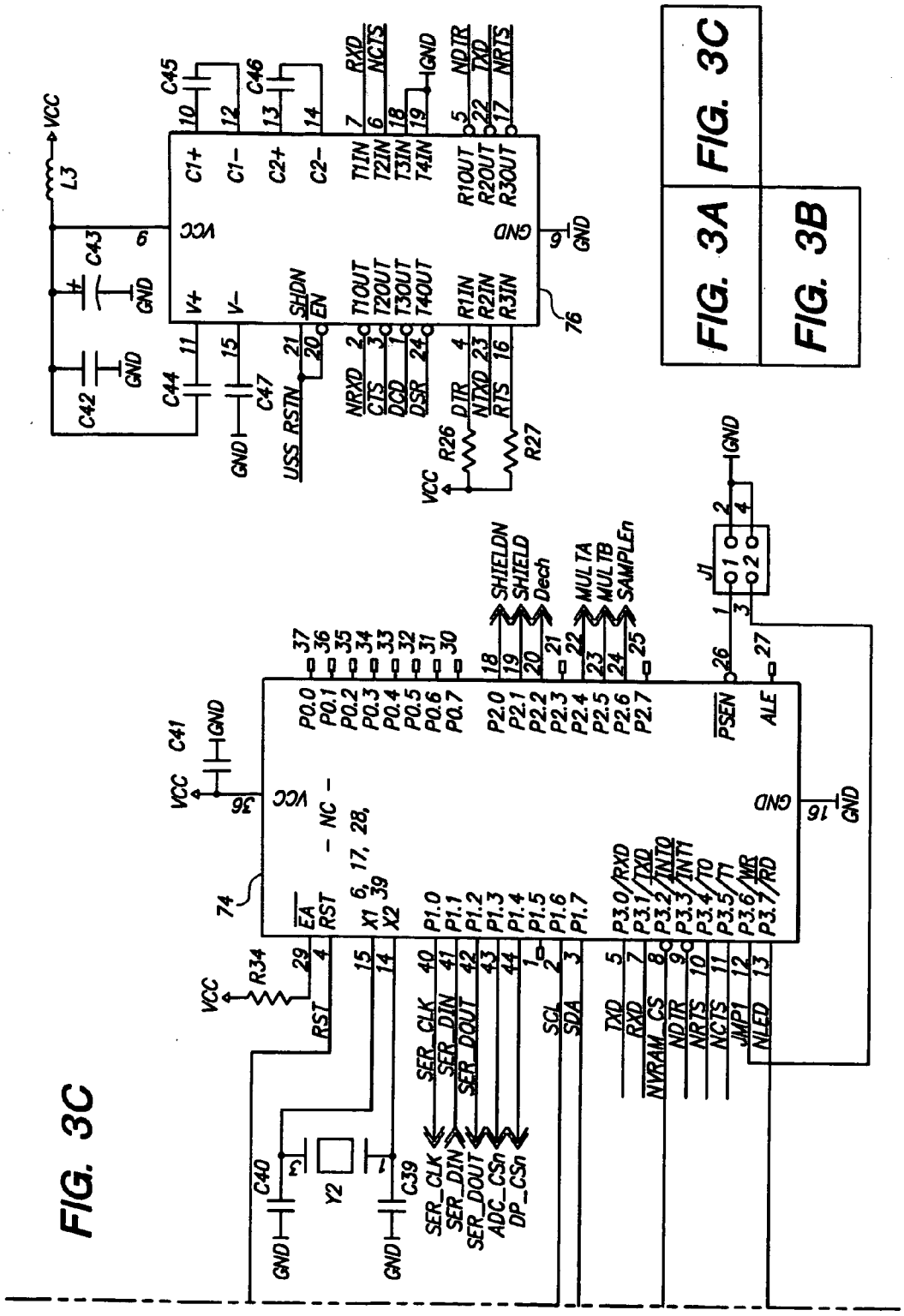
FIG. 3A
FIG. 3B
FIG. 3C
VCC
L3
C42
C43
C44
C45
C46
C47
GND
C1+
C1-
C2+
C2-
V+
V-
SHDN
EN
T1OUT
T2OUT
T3OUT
T4OUT
R1IN
R2IN
R3IN
T1IN
T2IN
T3IN
T4IN
R1OUT
R2OUT
R3OUT
RXD
NCTS
NDTR
TXD
NRTS
USS_RSTN
NRXD
CTS
DCD
DSR
DTR
NTXD
RTS
R26
R27
76
74
C41
R34
RST
EA
X1
X2
NC
P0.0
P0.1
P0.2
P0.3
P0.4
P0.5
P0.6
P0.7
P2.0
P2.1
P2.2
P2.3
P2.4
P2.5
P2.6
P2.7
PSEN
ALE
P1.0
P1.1
P1.2
P1.3
P1.4
P1.5
P1.6
P1.7
P3.0/RXD
P3.1/TXD
P3.2/INT0
P3.3/INT1
P3.4/T0
P3.5/T1
P3.6/WR
P3.7/RD
SHIELDN
SHIELD
Dech
MULTA
MULTB
SAMPLEn
J1
SER_CLK
SER_DIN
SER_DOUT
SCL
SDA
TXD
RXD
NVRAM_CS
NDTR
NRTS
NCTS
JMP1
NLED
ADC_CSn
DP_CSn
C40
C39
Y2