FIG.8B

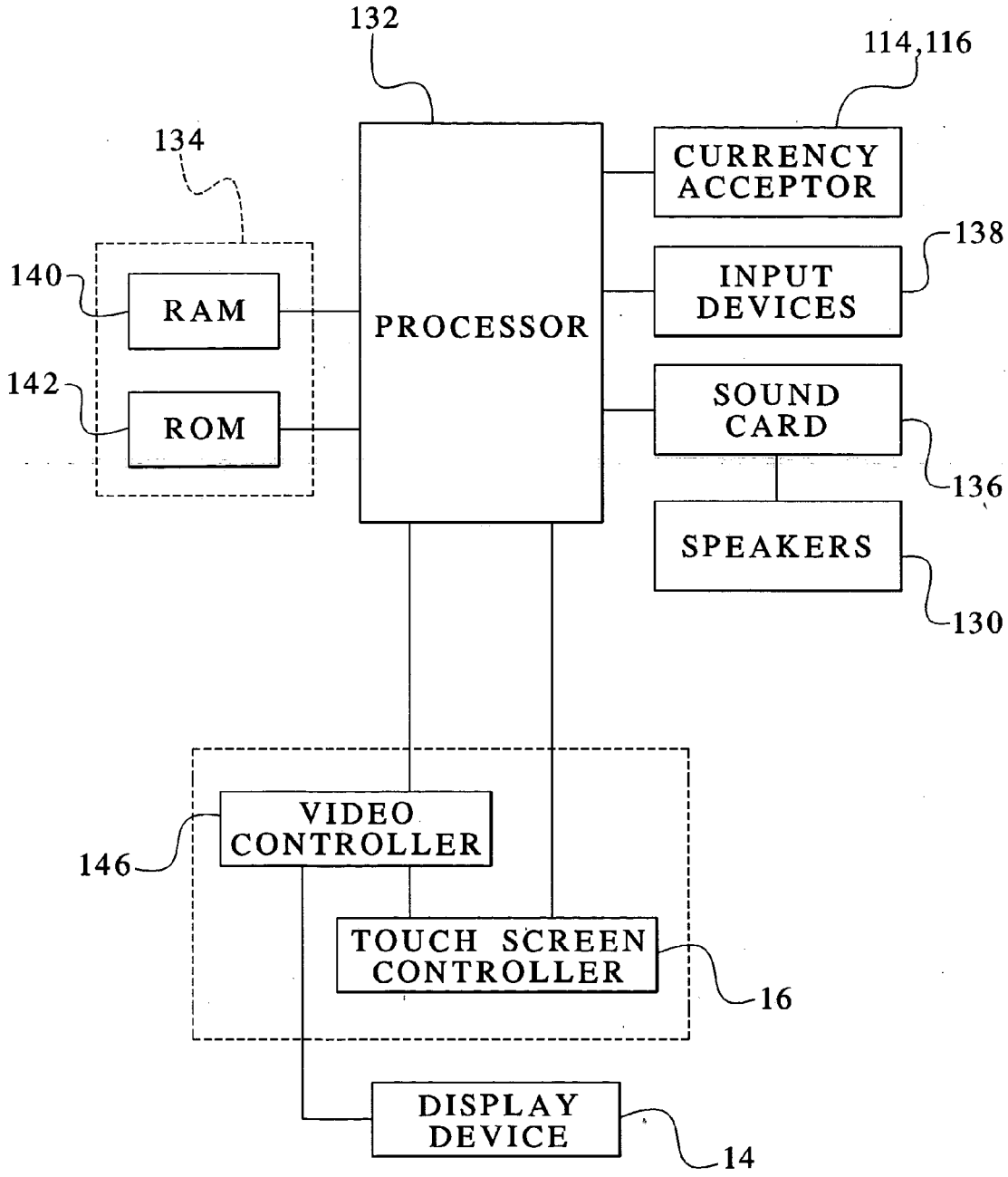
132
114,116
134
CURRENCY ACCEPTOR
138
140
RAM
PROCESSOR
INPUT DEVICES
142
ROM
SOUND CARD
136
SPEAKERS
130
VIDEO CONTROLLER
146
TOUCH SCREEN CONTROLLER
16
DISPLAY DEVICE
14