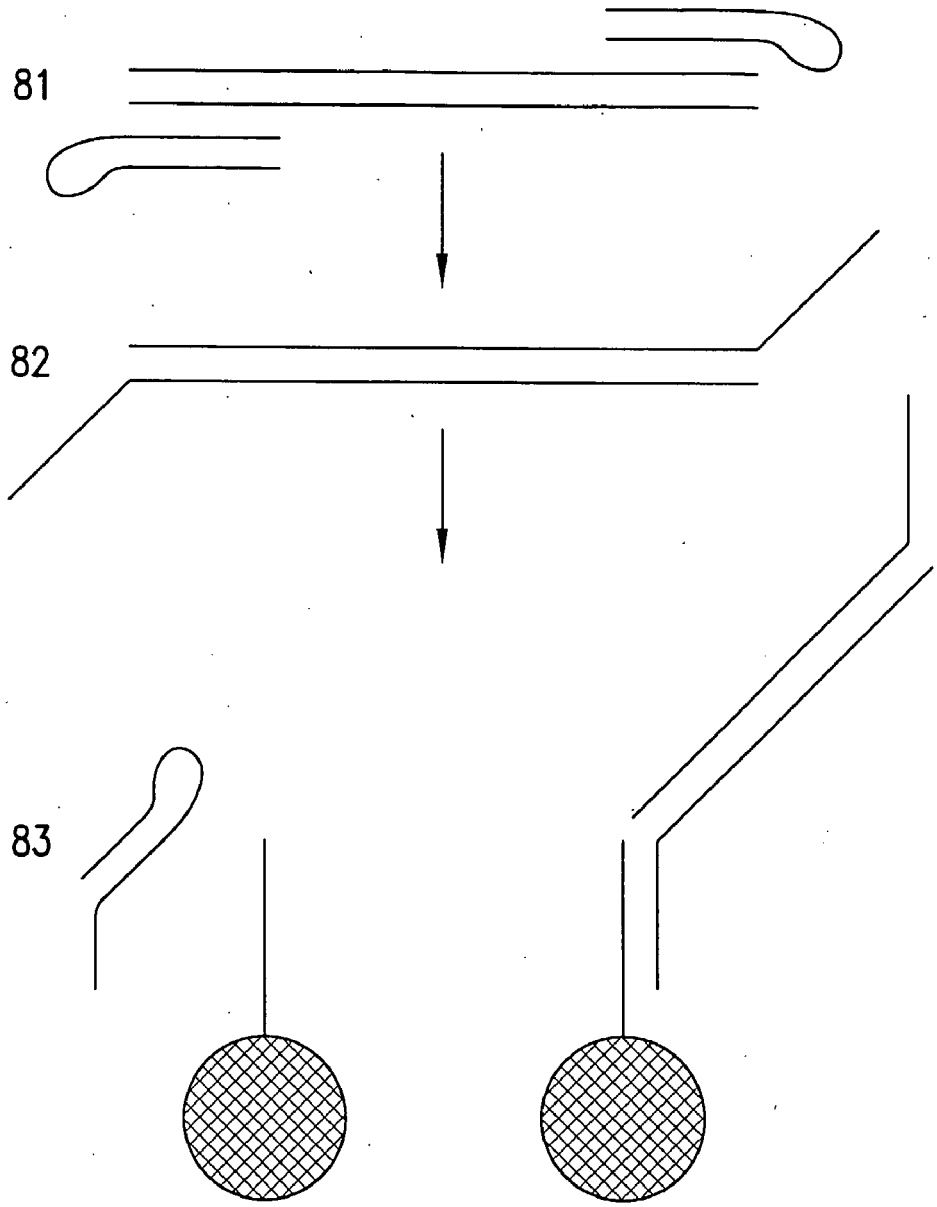

FIG.7C