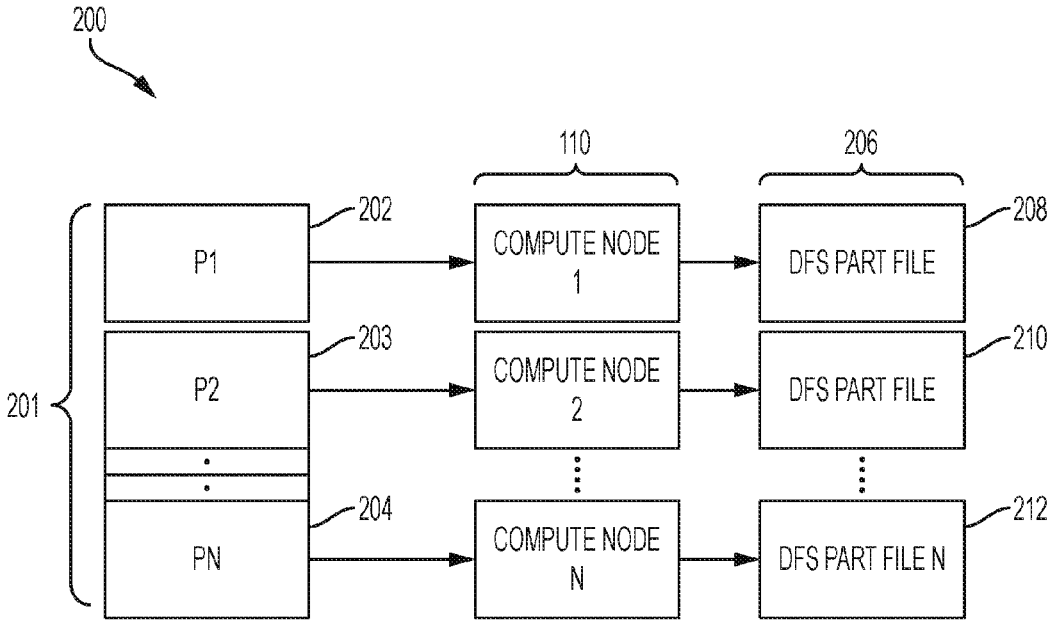
200
110
206
202
208
P1
COMPUTE NODE 1
DFS PART FILE
203
210
201
P2
COMPUTE NODE 2
DFS PART FILE
204
212
PN
COMPUTE NODE N
DFS PART FILE N

FIG. 2