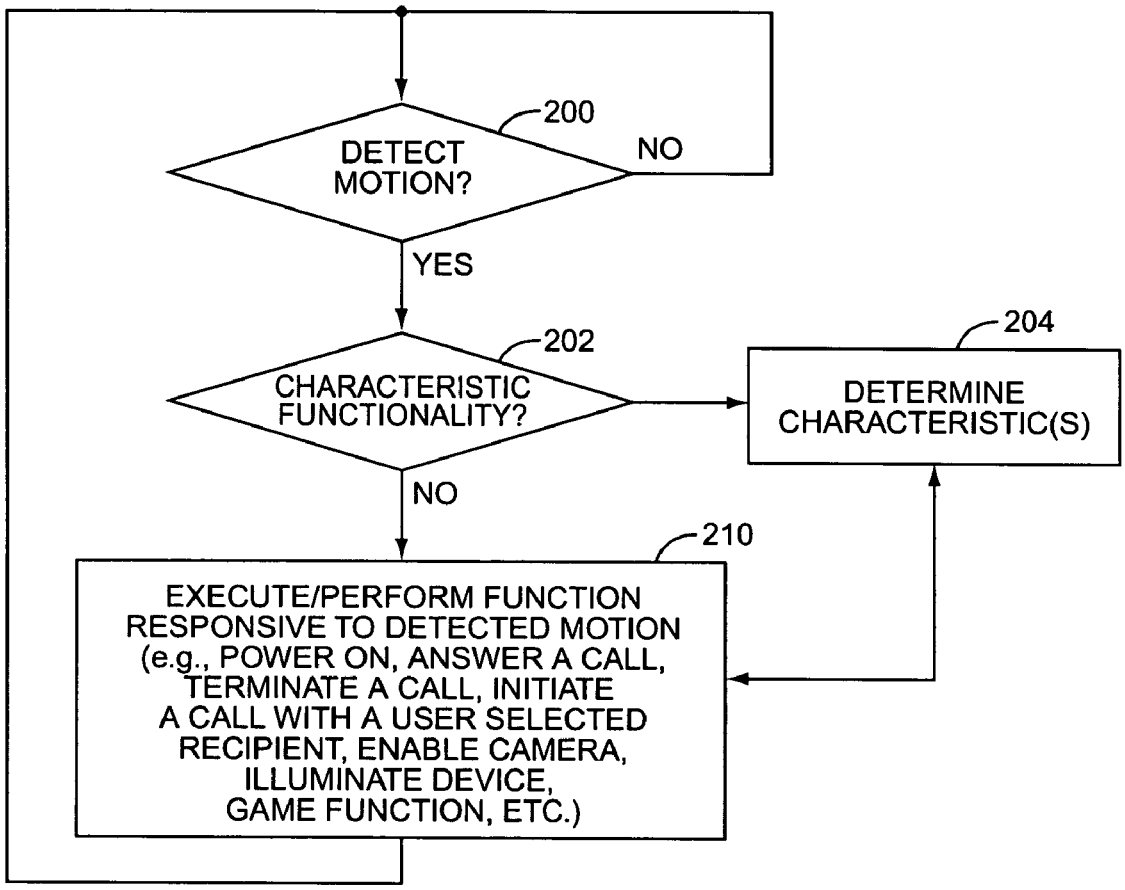
200
DETECT MOTION?
NO
YES
202
CHARACTERISTIC FUNCTIONALITY?
204
DETERMINE CHARACTERISTIC(S)
NO
210
EXECUTE/PERFORM FUNCTION RESPONSIVE TO DETECTED MOTION (e.g., POWER ON, ANSWER A CALL, TERMINATE A CALL, INITIATE A CALL WITH A USER SELECTED RECIPIENT, ENABLE CAMERA, ILLUMINATE DEVICE, GAME FUNCTION, ETC.)

FIG. 10