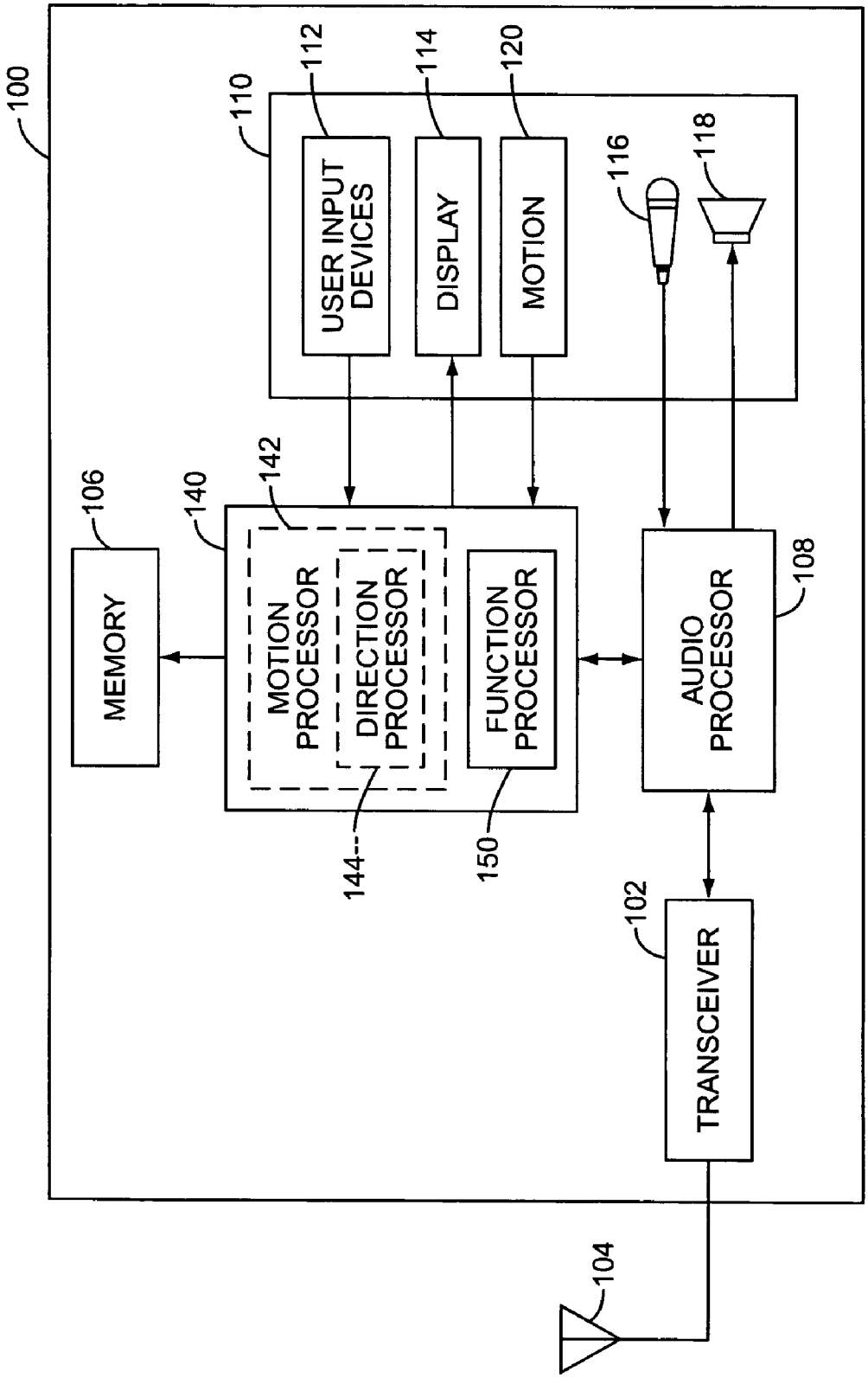
100
110
112
114
120
USER INPUT DEVICES
DISPLAY
MOTION
116
118
106
140
142
MEMORY
MOTION PROCESSOR
DIRECTION PROCESSOR
FUNCTION PROCESSOR
AUDIO PROCESSOR
108
144
150
102
TRANSCEIVER
104

FIG. 1